SUPREME COURT OF THE UNITED STATES.

OCTOBER TERM, 1888.

No. 1044.

THE PLANO MANUFACTURING COMPANY, APPELLANT,

vs.

ALVARO B. GRAHAM, AND PETER WHITMER, ADMINISTRATOR OF THE ESTATE OF HUGH GRAHAM, DECEASED.

APPEAL FROM THE CIRCUIT COURT OF THE UNITED STATES FOR THE NORTHERN DISTRICT OF ILLINOIS.

INDEX.

	Original.	Print.
Caption	1	1
Bond for costs	2	1
Bill of complaint	3	2
Subpœna	12	7
Marshal's return	13	7
Appearance of defendants	14	8
Order extending time to answer	15	8
Answer	17	9
Replication	24	12
Order granting leave to file supplemental answer	26	13
Supplemental answer	27	13
Order on complainants to close proofs	29	14
Order enlarging time to take complainants' rebutting testimony	30	15
Order " " " " &c	31	15
Order overruling motion to admit certain evidence	32	15
Order extending time to take defendants' proofs and granting leave to amend answer	33	16
Amendment to answer	34	16
Order modifying order extending time to take defendants' proofs, &c	36	17
Order extending time to close complainants' rebutting proofs	38	18
Order taking cause under advisement	39	18
Opinion of Judge Blodgett	41	19

JUDD & DETWEILER, PRINTERS, WASHINGTON, AUGUST 20, 1888.

	Original.	Print.
Stipulation waiving reference to master, &c	55	24
Affidavit of William H. Jones	57	25
Order making new parties	61	26
Decree	62	26
Complainants' prima facie evidence	65	28
Testimony of Wm. S. Bates	66	28
Complainants' evidence in rebuttal	89	42
Testimony of William S. Bates	89	42
Alvaro B. Graham	121	62
John F. Fullen	186	102
David H. Burrell	191	104
George W. Way	201	111
Charles A. Downs	215	120
Exhibit Way's Furlough—Furlough to Geo. W. Way, Dec. 9, 1862	218	122
Testimony of Charles Garlick	219	123
Peter Seyl	230	129
Alvaro B. Graham (recalled)	234	132
William H. Hubbard	237	134
Benjamin F. Porter	246	139
George W. Way (recalled)	253	144
Harmon Baker	269	154
William S. Bates (recalled)	273	157
Alfred Hart	276	158
John F. Steward	285	163
John G. K. Truair	305	175
George W. Hey	309	178
Defendants' evidence	311	179
Testimony of George G. Hunt	311	179
William H. Jones	370	209
Frank E. Curtis	374	211
George G. Hunt (recalled)	376	212
C. C. Bradley	381	214
Romyn Hamblin	399	223
H. J. Bierhart	403	225
Albert Bramer	406	227
A. G. Goldthwaite	416	232
James Pine	423	236
O. G. Stillman	436	242
Lewis Bramer	457	253
John J. Howe	470	260
Spafford Allen	478	264
B. W. Bramer	480	265
Alvah Woodworth	487	269
J. Wilson Howe	500	275
William W. Candee	507	279
Hiram McClure	509	280
C. W. H. Wood	515	283
Stephen Cheney	520	286
Mrs. Augusta Bramer	525	289
Mrs. Nellie B. Smith	529	291
King H. C. Preston	532	293
Jacob L. Pope	549	301
William H. Jones	559	306

	Original.	Print.
Graham Patent, No. 74,342	566	310
Pine Patent, No. 62,681	575	319
Bramer Patent, No. 51,546	579	325
Pine Patent, No. 44,655	582	328
Luckey Patent, No. 44,259	585	331
Prentiss & Birdsall Patent, No. 43,225	588	333
Stout Patent, No. 35,479	591	336
Bartlett Patent, No. 34,545	594	338
Herrington Patent, No. 31,973	598	341
Billings Patent, No. 33,691	601	344
Wheeler Patent, No. 31,686	606	347
Lom nt & Grojean Patent, No. 27,641	611	353
Chenoweth Patent, No. 26,091	613	354
Chenoweth Patent, No. 27,617	615	356
Zug Patent, No. 25,697	618	359
Stetson & Maynard Patent, No. 24,063	620	361
Miller Patent, No. 20,180	623	364
Lufkin Patent, No. 18,173	626	367
Dolph Patent, No. 18,141	629	369
Tinker & Sprague Patent, No. 17,945	631	370
Ball Patent, No. 25,797	634	373
Ball Patent, No. 15,507	642	377
Ball Patent, No. 18,788	644	378
Aultman & Miller Patent, No. 15,160	647	380
Haines Patent, No. 13,523	649	382
Wheeler Patent, No. 12,367	653	384
Wheeler Patent, No. 12,044	657	390
Appeal bond	662	394
Certificate of clerk	665	395

1 Pleas in the circuit court of the United States for the northern district of Illinois, held at the United States court-rooms, in the city of Chicago, in the district aforesaid, before the Hon. Henry W. Blodgett, district judge of the United States for the northern district of Illinois, on Saturday, the thirtieth day of June, in the adjourned May term of said court, in the year of our Lord one thousand eight hundred and eighty-eight, and of our Independence the one hundred and twelfth year.

WM. H. BRADLEY, *Clerk.*

NORTHERN DISTRICT OF ILLINOIS, *ss:*

ALVARO B. GRAHAM and PETER WHITMER, Administrator of the Estate of Hugh Graham, Deceased,
vs.
PLANO MANUFACTURING COMPANY, WILLIAM H. Jones, Edgar L. Henning, George W. Chamberlain, Frederick J. Huse, and Elijah H. Gammon. } In Chancery.

Be it remembered that on the sixteenth day of October, 1883, came the complainants, by their solicitors, and filed in the clerk's office of said court their bond for costs and bill of complaint in
2 said entitled cause; which said bond and bill are, respectively, in the words and figures following, to wit:

Bond for Costs.

UNITED STATES OF AMERICA, } *ss:*
Northern District of Illinois, }

Circuit Court. October Term, A. D. 1883. In Equity.

ALVARO B. GRAHAM *et al.*

vs.

PLANO MANUFACTURING COMPANY *et al.*

I enter myself security for costs in this cause and promise to pay all costs which may accrue to the opposite party in this action or to any of the officers of this court, and in default of payment by the complainants of any costs ordered or adjudged to be paid by them hereby agree and stipulate that execution may issue against my property for any costs taxed against them.

Dated this 16th day of October, A. D. 1883.

EPHRAIM BANNING.

Endorsed: Filed Oct. 16, A. D. 1883. Wm. H. Bradley, clerk.

3 *Bill.*

Circuit Court of the United States, Northern District of Illinois.
In Equity.

ALVARO B. GRAHAM *et al.*

vs.

PLANO MANUFACTURING COMPANY *et al.*

To the honorable the judges of the circuit court of the United States for the northern district of Illinois:

Alvaro B. Graham, of the city of Chicago, in the State — Illinois, and Hugh Graham, of the city of Bloomington, in the State of Illinois, and citizens of the State of Illinois, complainants, bring this their bill of complaint against the Plano Manufacturing Company, a corporation organized and existing under and by virtue of the laws of the State of Illinois, William H. Jones, Edgar L. Henning, George W. Chamberlain, and Frederick J. Huse, all of the city of Plano, in the State of Illinois, and Elijah H. Gammon, of the city of Batavia, in the State of Illinois, citizens of the State of Illinois, defendants; and thereupon your orators complain and say—

1. That prior to the 11th day of February, 1868, the said Alvaro B. Graham was the original and first inventor and discoverer of a new and useful improvement in harvesters not known or used by others before his invention thereof, and which had not, at the time of his application for a patent therefor, been in public use or
4 on sale for more than two years with his consent and allowance, as your orators verily believe; and that upon due application letters patent of the United States No. 74342, in due form, were issued to the said Alvaro B. Graham on the said 11th day of February, 1868, granting to him, his heirs, administrators, or assigns, for the term of seventeen years, the full and exclusive right of making, using, and vending to others to be used, the said invention, as by reference to said letters patent or a duly certified copy thereof here in court to be produced will more fully appear.

2. That by virtue of the premises and a written assignment, given for a good and valuable consideration, dated August 12, 1870, and recorded in the United States Patent Office September 12, 1870, in Liber H 13, page 329, of Transfers of Patents, the said Hugh Graham became the owner of the legal title to said patent; but that by virtue of a written agreement then executed between your orators the said Alvaro B. Graham continued to have an equitable interest therein and in the proceeds thereof, and that your orators ever since have been and now are the sole and exclusive owners of said letters patent, and are by law entitled to sue for and receive all damages, savings, and profits arising out of or occasioned by infringements thereof.

3. That the said letters patent are in all respects good and valid in law, so far as regards the first and second claims thereof, and that

the public now generally acknowledge and acquiesce in the validity thereof.

That on or about the 11th day of December, 1874, your orator, Hugh Graham, filed his bill of complaint in this honorable court against Elijah H. Gammon and William Deering, setting forth
5 the said letters patent and the infringement of the first and second claims thereof by the said defendants, and praying an account and injunction against them; that said defendants afterwards filed their answer to said bill denying, among other things, the validity of said patent as to said two claims, and setting up a large number of prior patents as anticipating said inventions; that issues being joined and proofs taken at length and for a long time said cause was brought to a hearing on the merits, on the 14th day of May, 1877, before his honor Judge Henry W. Blodgett, and was argued before him by the counsel for your orators and the said defendants, respectively, and was afterwards held under advisement by said judge until the 10th day of July, 1887, when judgment was duly pronounced; that said court then decided that said letters patent were good and valid in law as to said two claims, and that mowing machines sold by the said defendants were infringements thereof; that after said decision the said defendants, acquiescing therein and in the validity of said patent, settled with your orators for their past infringement, paying a large amount of money therefor; and that thereupon, to wit, on or about May 8, 1878, a final decree was entered against them in said cause, from which no appeal was ever taken, as by reference to the proceedings in said suit and the opinion of said court, published in the 3rd volume of Banning & Arden's Patent Cases, commencing at page 7, will more fully appear.

That on or about the 8th day of June, 1877, your orator, Hugh Graham, filed his bill of complaint against Cyrus H. McCormick, Leander J. McCormick, and Robert H. McCormick, in this honorable court, setting forth the said letters patent and the infringement of the first and second claims thereof by the said defendants,
6 and praying an account and injunction against them; that said defendants afterwards filed their answer to said bill denying, among other things, the validity of said patent as to said two claims, and setting up twenty-four prior patents as anticipating said invention, and various other grounds of defense; that issues being joined and proofs taken at length and for a long time said cause was brought to a hearing on the merits on the 14th, 15th, and 16th days of January, 1880, before their honors Judges Thomas Drummond and Charles E. Dyer, sitting together, and was argued before them by the counsel for said defendants and your orators, respectively, and was afterwards held under advisement by said judges until the 13th day of March, 1880, when judgment was duly pronounced; that said court then decided in a long and full opinion, written by his honor Judge Drummond, that said letters patent were good and valid in law as to said two claims, and that machines manufactured and sold by the defendants were infringements thereof; that the said defendants thereupon filed a petition for a rehearing,

which was argued at length on the 7th day of May, 1880, before said two judges, by the counsel for the said defendants and your orators, respectively, and then taken under advisement by said judges; and that afterwards, to wit, on or about the 22d day of April, 1882, the court announced their decision overruling said petition and again declaring and holding said two claims of said patent to be in all respects good and valid in law, as by reference to the proceedings in said suit and the opinion of said court, published in the 5th volume of Banning & Arden's Patent Cases, page 244, and in the 11th volume of the Federal Reporter, page 859, will more fully appear.

7 That on or about the 6th day of December, 1878, your orator, Hugh Graham, filed his bill of complaint against the Geneva Lake Crawford Manufacturing Company, in the circuit court of the United States for the eastern district of Wisconsin, setting forth the said letters patent and the infringement of the first and second claims thereof by the said defendant and praying an account and injunction against it; that said defendant afterwards filed its answer to said bill denying, among other things, the validity of said patent as to said two claims and setting up a large number of prior patents as anticipating said invention; that issues being joined and proofs taken at length and for a long time said cause was brought to a hearing on the merits on the 27th and 28th days of October, 1879, before his honor Judge Charles E. Dyer, and was argued before him by the counsel for your orators and said defendants, respectively, and was afterwards held under advisement by said judge until the 11th day of October, 1880, when judgment was duly pronounced, and that said court then decided, in a long and full opinion, that said letters patent were good and valid in law as to said two claims, and that machines manufactured and sold by the defendants were infringements thereof, and by decree afterwards entered of record perpetually enjoined the said defendants from making, using, or selling the said invention; and that afterwards, to wit, on or about the 10th day of May, 1881, a final decree for four thousand nine hundred and two dollars and twenty-nine cents and costs was entered against the said defendant, from which no appeal was ever taken, but which was afterwards settled by the defendant, as by reference to the proceedings in said suit and the opinion of said court, reported in the 11th volume of the Federal Reporter, page 138 will more fully appear.

8 That in addition to the decisions and settlements above mentioned your orators have granted licenses under said two claims of said patent to a large number of other manufacturers who have thus acquiesced in and recognized the validity of said two claims, to wit: The Remington Agricultural Company of Ilion, New York; The Warrior Mower Company (indirectly through David H. Burrell, a party interested therein) of Little Falls, New York; The Ann Arbor Agricultural Company of Ann Arbor, Michigan; The Wayne Agricultural Company of Richmond, Indiana; William Deering, of Chicago, and others.

4. That since the granting of said patent and the date of said

assignment and at divers times and occasions between that time and the filing of this your orators' bill the said The Plano Manufacturing Company, William H. Jones, Edgar L. Henning, George W. Chamberlain, Frederick J. Huse, and Elijah H. Gammon, the defendants herein, well knowing the premises, and in infringement of said patent and in violation of the exclusive rights of your orators thereunder, and since the same accrued to your orators and prior to the commencement of this suit, and without the license of your orators or either of them, at Plano, to wit, at the district aforesaid, and at various other places in the United States, have manufactured and sold and still continue to manufacture and sell mowing machines containing and embodying and having on them as a part thereof the improvements and inventions described in said letters patent No. 74342, and particularly mentioned and claimed in the first and second claims thereof; and that by reason of said infringement great injury has resulted to your orators and great gains and profits have accrued to said defendants, the full amount of which is unknown to your orators, but which in equity belong to them and should be accounted for by said defendants and paid over to
9 your orators as the avails of their exclusive rights aforesaid and profits and gains which they would have derived therefrom but for the unlawful acts of the said defendants.

That the inventions and improvements mentioned and secured in said two claims, being important and valuable, have come into general and extensive use in various parts of the country, and that your orators have granted a large number of licenses for the manufacture thereof, as above stated, from which they have realized and expect to realize large profits, and desire to grant similar licenses to other manufacturers; but that, if continued, the said wrongful acts of the said defendants, to wit, their infringement and disregard of said patent, are calculated to prevent their doing so and otherwise to greatly hinder and embarrass their business and operations and the business and operations of their licensees under said patent.

5. Wherefore your orators pray that the said defendants, The Plano Manufacturing Company, William H. Jones, Edgar L. Henning, George W. Chamberlain, Frederick J. Huse, and Elijah H. Gammon, their agents, attorneys, servants, and workmen, and each and every of them, may be restrained and enjoined, as well preliminarily and provisionally as perpetually, from such infringement of said letters patent; that said defendants may answer the premises (but not under oath, an answer under oath being hereby expressly waived), and may render to your orators a true account of the number of mowing machines they have made and sold embodying or having on them as a part thereof the improvements or inventions mentioned and claimed in the first and second claims of said patent; that they may be decreed to pay over to your orators any and all the gains, profits, and advantages, to be duly determined, made, derived, or received by them from the use of said patented in-
10 vention in violation of your orators' rights, and also all damages resulting to your orators therefrom, together with such increase over the actual damages suffered as is warranted by law

and as to your honors shall seem just and proper, and that your orators may have such other and further relief in the premises as may be agreeable to equity and good conscience and as to your honors shall seem meet.

To this end may it please your honors to grant unto your orators the writ of subpœna, issued out of and under the seal of this honorable court, directed to the said defendants, The Plano Manufacturing Company, William H. Jones, Edgar L. Henning, George W. Chamberlain, Frederick J. Huse, and Elijah H. Gammon, commanding them, by a certain day and under a certain penalty, to be and appear in this honorable court, and then and there to answer the premises and to stand to and abide by such order and decree as may be made against them; and also the writ of injunction, as well preliminary and provisional as perpetual, issuing out of and under the seal of this honorable court, enjoining and restraining the said defendants, The Plano Manufacturing Company, William H. Jones, Edgar L. Henning, George W. Chamberlain, Frederick J. Huse, and Elijah H. Gammon, their servants, agents, attorneys, and workmen, and each and every of them, as is heretofore in that behalf prayed.

And your orators will ever pray, etc.

ALVARO B. GRAHAM.
HUGH GRAHAM.

BANNING & BANNING,
Solicitors for Complainants.
EPHRAIM BANNING, *Of Counsel.*

11 UNITED STATES OF AMERICA.

NORTHERN DISTRICT OF ILLINOIS, } ss:
State of Illinois, Cook County, }

Alvaro B. Graham, being duly sworn, upon oath says that he is the patentee named in letters patent of the United States No. 74342, and one of the complainants named in the foregoing bill; that he has read said bill and knows the contents thereof, and that the same is true of his own knowledge, except as to matters therein stated on information and belief, and as to these he believes it to be true; that he verily believes himself to have been the first and original inventor of the improvements in harvesters described in said letters patent No. 74342, and particularly of the improvements mentioned and secured in the first and second claims thereof; that said letters patent are in all respects good and valid in law as to said two claims, and that the title to said patent is exclusively vested in said complainants, as alleged in said bill.

ALVARO B. GRAHAM.

Subscribed and sworn to before me this third day of September, 1883.

[SEAL.] CHARLES C. LINTHICUM,
Notary Public.

Endorsed: Filed Oct. 16, 1883. Wm. H. Bradley, clerk.

12 On the same day, to wit, on the sixteenth day of October, 1883, there issued out of said clerk's office a writ of subpœna in said entitled cause; which said writ, together with the return of the marshal endorsed thereon, is in the words and figures following, to wit:

Subpœna.

UNITED STATES OF AMERICA, } ss:
Northern District of Illinois, }

The United States of America to the Plano Manufacturing Company, a corporation, etc., William H. Jones, Edgar L. Henning, George W. Chamberlain, Frederick J. Huse, and Elijah H. Gammon, Greeting:

We command you and every of you that you appear before our judges of our circuit court of the United States of America for the northern district of Illinois, at Chicago, in said district, on the first Monday in the month of November next, to answer the bill of complaint of Alvaro B. Graham and Hugh Graham, this day filed in the clerk's office of said court, in said city of Chicago, then and there to receive and abide by such judgment and decree as shall then or thereafter be made, upon pain of judgment being pronounced against you by default.

To the marshal of the northern district of Illinois to execute.

13 Witness the Hon. Morrison R. Waite, Chief Justice of the Supreme Court of the United States of America, at Chicago aforesaid, this 16th day of October, in the year of our Lord one thousand eight hundred and eighty-three, and of our Independence the 108th.

[SEAL.] W. H. BRADLEY, *Clerk.*

MEMORANDUM.—The above-named defendants are notified that unless they and each of them shall enter appearance in the clerk's office of said court, at Chicago aforesaid, on or before the day to which the above writ is returnable the complainants' bill will be taken against them as confessed and a decree entered accordingly.

W. H. BRADLEY, *Clerk.*

Marshal's Return.

I have served the within writ within my district in the following manner, to wit, upon The Plano Manufacturing Company, a corporation, by delivering a true copy to William H. Jones, president of said company, therein named, on the 16th day of October, A. D. 1883; also upon William H. Jones, therein named, on the 16th day of October, A. D. 1883; also upon George W. Chamberlain, therein named, on the 16th day of October, A. D. 1883, by personally deliv-

14 ering to each of them a true copy of the same on the aforesaid day.

I did not serve E. L. Henning, F. J. Huse, E. H. Gammon, the

other defendants, having been unable to find either of them or that they had any residence within my district.

A. M. JONES, *U. S. Marshal*,
By R. D. SHERMAN, *Deputy*.

Endorsed: Filed Nov. 3d, A. D. 1883. W. H. Bradley, clerk.

Afterwards, to wit, on the eighth day of November, 1883, came the defendants, by their solicitors, and filed in said clerk's office their appearance in said entitled cause; which said appearance is in the words and figures following, to wit:

Appearance.

United States Circuit Court, Northern District of Illinois. In Equity.

ALVARO B. GRAHAM and HUGH GRAHAM
vs.
THE PLANO MAN'F'G CO. *et al.*

Wm. H. Bradley, clerk:

15 We hereby enter our appearance for said defendants.
Chicago, November 8, 1883.

COBURN & THACHER,
Def'ts' Sol'rs.

Endorsed: Filed Nov. 8th, 1883. W. H. Bradley, clerk.

Afterwards, to wit, on the fourth day of December, in the adjourned October term of said court, 1883, in the record of the proceedings thereof in said entitled cause, before Hon. Henry W. Blodgett, district judge, is the following entry, to wit:

Order.

ALVARO B. GRAHAM and HUGH GRAHAM
vs.
THE PLANO MANUFACTURING COMPANY *et al.*
} In Chancery.

By stipulation this day filed herein and on motion of L. L. Coburn, defendants' solicitor, the time for said defendants to answer herein is hereby extended to the first Monday in January next.

16 Afterwards, to wit, on the seventh day of January, 1884, came the defendants, by their solicitors, and filed in said clerk's office their answer to the bill in said entitled cause; which said answer is in the words and figures following, to wit:

17 *Answer.*

United States Circuit Court, Northern District of Illinois. In Chancery.

ALVARO B. GRAHAM and HUGH GRAHAM

vs.

THE PLANO MANUFACTURING CO., WILLIAM H. JONES, EDGAR L. Henning, George W. Chamberlain, Frederic J. Huse, and Elijah H. Gammon.

The joint and several answer of The Plano Manufacturing Co., William H. Jones, Edgar L. Henning, George W. Chamberlain, Frederic J. Huse, and Elijah H. Gammon, defendants, to the bill of complaint of Alvaro B. Graham and Hugh Graham, complainants.

These defendants, saving and reserving to themselves all and all manner of exceptions to the manifold errors and uncertainties in said bill of complaint contained, for answer thereunto or unto such parts as they are advised are material to be answered unto, say that they admit, on information and belief, that letters patent of the United States No. 74342 were, on the 11th day of February,
18 1868, issued to the said Alvaro B. Graham, as stated in said bill; but these defendants deny that the said Alvaro B. Graham was the first and original inventor of the improvements alleged in said letters patent or that said letters patent were lawfully issued and delivered to the said Alvaro B. Graham or that the said Graham thereby obtained any exclusive or any right in said alleged improvement by virtue of said letters patent.

These defendants have no information in regard to the alleged assignment to said Hugh Graham of the legal title to said letters patent, as stated in said bill, and they require strict proof from the complainants of the allegations in said bill in that behalf.

These defendants, further answering, deny that said letters patent or any of the claims thereof are good and valid in law or that the public have generally acquiesced in the validity thereof, as stated in said bill.

These defendants, further answering, say that they do not know, of their own knowledge, whether the said letters patent have been litigated, as stated in said bill of complaint. They therefore neither admit nor deny the same, and these defendants say that if there has been such litigation the issues presented by the respective parties in such litigation are other and different from the issues in this cause, and these defendants are not bound thereby.

The defendant, Plano Manufacturing Company, admits that it is now and has been for some time engaged in manufacturing; that it manufactures, among other things, mowing machines; but the defendant, The Plano Manufacturing Company, denies that it
19 is now manufacturing or that it has ever manufactured mowing machines containing or embodying or having on them as a

part thereof the improvements and inventions described in said letters patent No. 74342, and particularly mentioned and claimed in the first and second claims thereof. This defendant, The Plano Manufacturing Company, says that the finger beams are connected to the gearing carriages in the mowers manufactured by it in a substantially different way and by different devices from the devices shown in the complainants' patent and claim in the first and second claims thereof; that the construction used by the Plano Manufacturing Company is old and, in view of the state of the art, in no way infringes the complainants' letters patent or the first and second claims thereof; and these defendants, from the matters and things set forth and hereinafter set forth in this answer, deny that they do now or ever have in any way infringed said letters patent or the first and second claims thereof or the complainants' rights under the same.

And this defendant, The Plano Manufacturing Company, says that it now and for some time has been manufacturing mowing machines as aforesaid under and by virtue of a license from one Frank Bramer; that said license from said Frank Bramer includes the right, among other things, to manufacture mowing machines in accordance with and under letters patent No. 51546, granted to said Frank Bramer December 19, 1865, and reissued February 27, 1877, as reissue No. 7539, and other patents; that the said The Plano Manufacturing Company is manufacturing mowing machines under said license of the same general type as the mowing machines described, shown, and claimed in said letters patent so issued to said Frank Bramer.

These defendants, further answering, deny that the said Alvaro B. Graham was the first or original inventor of the alleged inventions claimed and described in said letters patent No. 74342, or any substantial or material parts thereof, because these defendants say that the said alleged invention and every substantial and material part thereof was, prior to the alleged invention or discovery thereof by the said Alvaro B. Graham, described or patented in each of the following-named letters patent of the United States, to wit:

No. 18141, granted to C. C. Dolph, September 8, 1857.

No. 25697, granted to David Zug, October 4, 1859.

No. 47807, granted to John U. Dodge, May 23, 1865.

No. 34545, granted to Stephen S. Bartlett, assignment, February 25, 1862.

No. 34090, granted to W. Dewitt, January 7, 1862.

No. 25797, granted to F. Ball, October 18, 1859.

No. 20180, granted to C. Altman & Co., assignee of Lewis Miller, May 4, 1858.

Reissue No. 766, granted to C. Altman & Co., assignee of Lewis Miller, July 19, 1859.

No. 13523, granted to J. Haines, September 4, 1855.

No. 61228, granted to L. J. McCormick and Lambert Erpelding, assignors to L. J. McCormick, January 15, 1867.

No. 31686, granted to Cyrenus Wheeler, Jr., March 12, 1861.

No. 55427, granted to D. R. Paste, June 5, 1866.

21 No. 17945, granted to F. Jones, assignor, August 4, 1857. Same reissue as No. 1964, May 23, 1865.

No. 44259, granted to D. Luckey, September 13, 1864.

No. 34760, granted to J. P. Murrey, March 25, 1862.

No. 29105, granted to Samuel and John H. Buser, February 14, 1860.

No. 31158, granted to John Esterly, January 22, 1861.

No. 46390, granted to E. P. Russell, February 14, 1865.

No. 27641, granted to F. T. Lomont and J. Grojean, March 27, 1860.

No. 49963, granted to Lindley K. Batty, Sept. 19, 1865.

No. 61644, granted to Andrew Wemple, January 29, 1867.

No. 67011, granted to A. B. Graham, assignor, July 23, 1867.

No. 50956, granted to Ray & Grant, November 14, 1865. Harvester.

No. 51546, granted to Frank Bramer, December 19, 1865, and reissued February 27, 1877, as reissue No. 7539. Harvesters.

No. 24063, granted to Stetson & Maynard, November 17, 1859. Harvesting machine.

No. 26091, granted to G. E. Chenoweth, November 15, 1859. Harvester.

No. 27617, granted to G. E. Chenoweth, May 27, 1860, for harvester.

22 No. 33691, granted to O. Billings, November 12, 1861, and reissued August 19, 1873, as reissue No. 5538, for harvesters.

No. 35479, granted to J. W. Stout, June 3, 1862, for harvester.

No. 44655, granted to J. Pine, October 11, 1864, and reissued October 10, 1876, as reissue No. 7344, for mowing machines.

These defendants, further answering, deny that the said Alvaro B. Graham was the first or original inventor of the alleged inventions claimed and described in said letters patent No. 74342 or any substantial or material parts thereof, because these defendants further allege, upon information and belief, that the said alleged invention and every substantial and material part thereof was, prior to the alleged discovery or any discovery whatever thereof by the said Alvaro B. Graham, known and used by the following-named persons, to wit:

Frank Bramer, and was practiced by the said Frank Bramer and by persons in his employ and by other persons at Little Falls, in the State of New York, and other places in the United States.

G. E. Chenoweth, and was practiced by the said Chenoweth and by other persons at Baltimore, in the State of Maryland, and in other places in the United States.

O. Billings, and was practiced by the said O. Billings and other persons at La Grange, in the State of Ohio, and other places in the United States.

James Pine, and was known and practiced by the said
23 James Pine and other persons at Troy, in the State of New York, and other places in the United States.

And the defendants, William H. Jones, Edgar L. Henning,

George W. Chamberlain, Frederic J. Huse, and Elijah H. Gammon, each for himself, deny that they or either of them are now manufacturing or that they ever have manufactured mowing machines containing or embodying or having on them as a part thereof the improvements and inventions described in the complainants' letters patent. These last-named defendants and each of them deny that they are now or ever have been engaged in manufacturing mowing machines or harvesters as individuals.

And as to all other matters and things necessary and material to be answered unto by these defendants and not herein already fully answered, these defendants deny the statements of said bill of complaint relative thereto.

And these defendants submit that the complainants have not in and by their said bill of complaint made or stated such a case as entitles them to any relief from this court; and these defendants pray that they have the same benefit of this defense as if they had demurred to said bill, and pray to be hence dismissed with their reasonable costs in this behalf most wrongfully sustained.

THE PLANO MANUFACTURING CO.,
[SEAL.] By W. H. JONES, *Pres't.*
WILLIAM. H. JONES;
EDGAR L. HENNING,
GEORGE W. CHAMBERLAIN,
FREDERIC J. HUSE,
ELIJAH H. GAMMON,
By COBURN & THACHER, *Their Solicitors.*

Endorsed: Filed Jan'y 7, 1884. Wm. H. Bradley, clerk.

24 Afterwards, to wit, on the twenty-eighth day of January, 1884, came the complainants, by their solicitors, and filed in said clerk's office their replication to the answer of the defendants in said entitled cause; which said replication is in the words and figures following, to wit:

Replication.

Circuit Court of the United States, Northern District of Illinois.
In Equity.

ALVARO B. GRAHAM *et al.*
vs.
PLANO MANUFACTURING COMPANY *et al.*

The replication of Alvaro B. Graham and Hugh Graham, complainants, to the answer of Plano Manufacturing Company, William H. Jones, Edgar L. Henning, George W. Chamberlain, Frederick J. Huse, and Elijah H. Gammon, defendants.

These repliants, saving and reserving unto themselves now and at all times hereafter all and all manner of benefit and advantage of exception which may be had or taken to the manifold insuffi-

ciencies of the said answer, for replication thereunto, say that they will aver, maintain, and prove their said bill of complaint to be true, certain, and sufficient in law to be answered unto, and
25 that the said answer of the said defendant is uncertain, untrue, and insufficient to be replied unto by these repliants, without this, that any other matter or thing whatsoever in said answer contained material or effectual in the law to be replied unto, and not herein and hereby well and sufficiently replied unto, confessed or avoided, traversed or denied, is true; all which matters and things these repliants are and will be ready to aver, maintain, prove as this honorable court shall direct, and humbly pray as in and by their said bill they have already prayed.

BANNING & BANNING,
Solicitors for Complainants.

Endorsed: Filed this 28th day of January, A. D. 1884. W. H. Bradley, clerk.

26 Afterwards, to wit, on the sixteenth day of November, in the adjourned October term of said court, 1885, in the record of the proceedings thereof in said entitled cause, before Hon. Henry W. Blodgett, district judge, is the following entry, to wit:

Order.

ALVARO B. GRAHAM *et al.*
vs.
PLANO MANUFACTURING COMPANY *et al.* } In Chancery.

On motion of the defendants, by Mr. Thacher, leave is given them to file a supplemental answer herein.

On the same day, to wit, on the sixteenth day of November, 1885, came the defendants, by their solicitors, and filed in said clerk's office their supplemental answer in said entitled cause; which said supplemental answer is in the words and figures following, to wit:

27 *Supplemental Answer.*

United States Circuit Court, Northern District of Illinois. In Equity.

ALVARO B. GRAHAM and HUGH GRAHAM
vs.
THE PLANO MANUFACTURING COMPANY *et al.*

Now come the defendants in the above-entitled cause, by Coburn & Thacher, their solicitors, and, by leave of the court first had and obtained, further answering, say—

That prior to the application of the said Graham for said letters patent No. 74342, so declared upon in the bill in this cause, and prior to any invention by the said Graham of the same, the devices shown and claimed in complainants' letters patent or material parts of the

same were shown, described, and claimed in each of the following additional letters patent of the United States, to wit:

Letters patent No. 12044, to Cyrenus Wheeler, Jr., Dec. 5, 1854.

Letters patent No. 12367, to Cyrenus Wheeler, Jr., Feb. 6, 1855.

Letters patent No. 15160, to C. Aultman and L. Miller, June 17, 1856.

Letters patent No. 15507, to Ephraim Ball, Aug. 12, 1856.

Letters patent No. 17945, to C. Tinker and J. A. Sprague, Aug. 4, 1857.

28 Letters patent No. 18173, to C. M. Lufkin, Sept. 8, 1857.

Letters patent No. 18788, to E. Ball, Dec. 1, 1857.

Letters patent No. 20180, to Lewis Miller, May 4, 1858.

Letters patent No. 31973, to E. F. & J. Herrington, April 9, 1861.

Letters patent No. 43225, to Prentiss & Birdsall, June 21, 1864.

Letters patent No. 62681, to J. Pine, March 5, 1867.

These defendants, further answering, say that prior to any application or invention by the said Graham of the devices and inventions claimed in said letters patent No. 74342 the alleged inventions, or substantial and material parts thereof were, prior to the said application, known, used, and practiced by the following-named persons, to wit:

C. C. Bradley, now residing at Syracuse, in the State of New York, and it was practiced and known by the said Bradley and his agents, employees, and workmen at said Syracuse.

Bradley & Co., a copartnership doing business at said Syracuse, and was practiced by the said Bradley & Co., their agents, employees, and workmen, at Syracuse, New York.

PLANO MANUFACTURING CO.,
WILLIAM H. JONES,
EDGAR L. HENNING,
GEORGE W. CHAMBERLAIN,
FREDERIC J. HUSE,
ELIJAH H. GAMMON,
By COBURN & THACHER,
Their Solicitors.

Endorsed: Filed Nov. 16, 1885. Wm. H. Bradley, clerk.

29 Afterwards, to wit, on the first day of November, in the adjourned October term of said court, 1886, in the record of the proceedings thereof in said entitled cause, before Hon. Henry W. Blodgett, district judge, is the following entry, to wit:

Order.

ALVARO B. GRAHAM *et al.*
vs.
PLANO MANUFACTURING COMPANY *et al.* } In Chancery.

Now come the parties, by their solicitors, and, on motion of defendants, by Mr. Thacher, the complainants are hereby ruled to close their proofs by the first day of March next.

30 Afterwards, to wit, on the twenty-first day of March, in the adjourned March term of said court, 1887, in the record of the proceedings thereof in said entitled cause, before Hon. Henry W. Blodgett, district judge, is the following entry, to wit:

Order.

ALVARO B. GRAHAM *et al.*
vs.
PLANO MANUFACTURING COMPANY *et al.* } In Chancery.

Now come the parties, by their solicitors, and now comes on to be heard the complainants' motion for an extension of time to take rebutting testimony, and, after hearing the arguments of counsel, the court sustains said motion and orders that the time be enlarged to the tenth day of May next for that purpose.

31 Afterwards, to wit, on the twenty-ninth day of April, in the adjourned March term of said court, 1887, in the record of the proceedings thereof in said entitled cause, before Hon. Henry W. Blodgett, district judge, is the following entry, to wit:

Order.

ALVARO B. GRAHAM *et al.*
vs.
PLANO MANUFACTURING COMPANY *et al.* } In Chancery.

On motion of complainants' solicitor the time to close rebutting proofs herein is hereby extended to the first day of June next, and this cause is set for final hearing on pleadings and proofs on the twenty-fifth day of June next.

32 Afterwards, to wit, on the second day of May, in the adjourned May term of said court, 1887, in the record of the proceedings thereof in said entitled cause, before Hon. Henry W. Blodgett, district judge, is the following entry, to wit:

Order.

ALVARO B. GRAHAM *et al.*
vs.
PLANO MANUFACTURING COMPANY *et al.* } In Chancery.

Now come the parties, by their solicitors, and the complainants having heretofore moved the court that all the evidence introduced in the case under the same patent against Cyrus H. McCormick *et al.*, and which was considered by this court at the final hearing thereof, be admitted and used as evidence herein, and the same having been heard on the part of the respective counsel herein, and the court, being now fully advised thereon, overrules said motion.

33 Afterwards, to wit, on the thirty-first day of May, in the adjourned May term of said court, 1887, in the record of the proceedings thereof in said entitled cause, before Hon. Henry W. Blodgett, district judge, is the following entry, to wit:

Order.

ALVARO B. GRAHAM *et al.*
vs.
PLANO MANUFACTURING COMPANY *et al.* } In Chancery.

Now come the parties, by their solicitors, and after hearing the defendants' motion to extend the time for taking additional testimony the court sustained said motion, and the time for taking such testimony is hereby extended to the twentieth day of June next, conditioned that the defendants pay all the expenses of taking such testimony, including the traveling expenses of complainants' solicitors and such other compensation to complainants' solicitors as the court may hereafter fix.

On motion of Mr. Thacher, leave is given defendants to amend their answer herein.

On the same day, to wit, on the thirty-first day of May, 1887, came the defendants, by their solicitors, and filed in said clerk's office their amendment to their answer in said entitled cause; which said amendment is in the words and figures following, to wit:

34 *Amendment to Answer.*

United States Circuit Court, Northern District of Illinois. In Chancery.

ALVARO B. GRAHAM and HUGH GRAHAM

vs.

THE PLANO MANUFACTURING COMPANY, WILLIAM H. JONES, EDGAR L. HENNING, GEORGE W. CHAMBERLAIN, FREDERICK J. HUSE, and ELIJAH H. GAMMON.

And now come the defendants in the above-entitled case, by Coburn & Thacher, their solicitors, and by leave of the court first had and obtained, further answering, say—

That the alleged inventions claimed and described in said letters patent No. 74342, or substantial and material parts thereof, were, prior to any alleged discovery or invention thereof by the said Alvaro B. Graham, known and used by the following-named persons at the following-named places, to wit:

Frank Bramer, now deceased, who practiced said invention at Fabius, N, Y.

Albert Bramer, of Onondaga Valley, N. Y., and at Fabius and Little Falls, N. Y.

K. H. C. Preston, of Syracuse, N. Y., who practiced the
35 same at Fabius and Manlius, in the State of New York, and the employees and agents of the said Preston.

W. A. Sweet, W. Cox, Royal, Thom, and Amos Padgham, all of Syracuse, N. Y., who had knowledge of the invention of said Frank Bramer.

Alva Woodworth, of Manlius, N. Y., who had knowledge of said invention at said Manlius and at Fabius, N. Y.

C. W. H. Wood, Stephen Cheney, and W. W. Candee, all residing at Manlius, who had knowledge of said inventions at said Manlius and Fabius.

Harlow C. Phillips, of Fabius, N. Y., who practiced said invention at Fabius, N. Y.

Sherman Corbin, Arthur Caldwell, Spafford Allen, all of said Fabius, N. Y., who had knowledge of the same at Fabius.

Orsemus Stillman, of Addison, N. Y., who had knowledge of said inventions and practiced the same at Fabius, N. Y.

David Bramer, of Boston, Mass.

—— Pope, Trumansburgh, N. Y., who practiced said inventions at Trumansburgh, and the agents and employees of the said Pope, and other parties whose names are unknown to these defendants, but who reside at or near Trumansburgh.

Benjamin Bramer, of Fabius, N. Y., who had knowledge of the same at Fabius.

S. L. Ransom, of Summit Station, N. Y.

Mary A. Bramer, of Little Falls, N. Y., who knew of said invention at said Fabius.

Endorsed: Filed May 31, 1887. Wm. H. Bradley, clerk.

36 Afterwards, to wit, on the first day of June, in the adjourned May term of said court, 1887, in the record of the proceedings thereof in said entitled cause, before Hon. Henry W. Blodgett, district judge, is the following entry, to wit:

Order.

ALVARO B. GRAHAM *et al.*
vs.
THE PLANO MANUFACTURING COMPANY *et al.* } In Chancery.

On motion of defendants in the above-entitled cause, by Coburn and Thacher, their solicitors, and counsel for the respective parties having been heard, it is hereby further ordered that the order therein entered May 31, 1887, extending time for defendants to take further proofs on certain conditions be modified as follows:

1. The actual costs of taking proofs by the defendants under the said extension order shall be paid by the defendants and shall not be taxable in this cause.

2. The order requiring defendants to pay in addition the traveling expenses of counsel for complainants in attending the taking of such testimony and such attorney's fees for complainant as the court

in its discretion may require is hereby suspended for the
37 present and is left for determination at the final hearing of this cause.

3. Complainants shall have the right to take rebutting testimony during the extended time, as ordered, at the place or places where defendants' proof may be taken after defendants have closed their proofs.

38 Afterwards, to wit, on the twenty-third day of June, in the adjourned May term of said court, 1887, in the record of the proceedings thereof in said entitled cause, before Hon. Henry W. Blodgett, district judge, is the following entry, to wit:

Order.

ALVARO B. GRAHAM *et al.*
vs.
PLANO MANUFACTURING COMPANY *et al.* } In Chancery.

Now come the parties, by their solicitors, and on motion of E. Banning, Esq., the time for the complainant to close his rebutting testimony is hereby extended to the twentieth day of August next.

39 Afterwards, to wit, on the twenty-fifth day of November in the adjourned October term of said court, 1887, in the record of the proceedings thereof in said entitled cause, before Hon. Henry W. Blodgett, district judge, is the following entry, to wit:

Order.

ALVARO B. GRAHAM *et al.*
vs.
PLANO MANUFACTURING COMPANY *et al.* } In Chancery.

Now come the parties, by their solicitors, and this cause, being set for hearing this day upon pleadings and proofs, now comes on to be heard, and after hearing the arguments of counsel in part further hearing is postponed until to-morrow morning.

Afterwards, to wit, on the twenty-sixth day of November, in the adjourned October term of said court, 1887, in the record of the proceedings thereof in said entitled cause, before Hon. Henry W. Blodgett, district judge, is the following entry, to wit:

Order.

ALVARO B. GRAHAM *et al.*
vs.
PLANO MANUFACTURING COMPANY *et al.* } In Chancery.

40 Now again come the parties, by their solicitors, and this cause again comes on to be heard upon pleadings and proofs, and after hearing the concluding arguments of counsel the court takes the same under advisement.

Afterwards, to wit, on the twentieth day of February, 1888, there was filed in said clerk's office the opinion of Judge Blodgett in said entitled cause; which said opinion is in the words and figures following, to wit:

41 *Opinion.*

United States Circuit Court, Northern District of Illinois.

ALVARO B GRAHAM *et al. vs.* THE PLANO MANUFACTURING CO.

FEBRUARY 20, 1888.

Banning & Banning, for complainants; Coburn & Thacher, for defendant.

BLODGETT, *J.:*

The bill in this case charges the defendants with the infringement of letters patent No. 74342, granted February 11, 1868, to Alvaro B. Graham for an "improvement in harvesters."

Infringement is charged of the first and second claims of the patent, which describe and cover the device by which the finger bar is made to rise and fall at either end and rock forward or backward independently of the gearing carriage, while maintaining its connection with it. The first claim is for the device shown, whereby the finger beam is enabled to rise and fall at either end and rock forward or backward independently of the gearing carriage,

42 and the second claim covers this device, together with a lever by which the finger beam may be rocked by the driver or operator of the machine for the purpose of setting its guard fingers at any desirable inclination to the horizontal line.

The defenses interposed are—

1. Want of patentable novelty.
2. Public use of the device for more than two years before the patent in question was applied for.
3. That defendants do not infringe.

This patent has been twice before this court; first, in the case of Graham *vs.* Gammon *et al.*, in July, 1877, where the controversy was as to the validity of the claims now in question, reported 7 Biss., 490; and second, in Graham *vs.* McCormick *et al.* (10 Biss., 39), where the same claims were in controversy; and in the eastern district of Wisconsin, in the case of Graham *vs.* Geneva Lake Manufacturing Co., decided by his honor Judge Dyer in October, 1880, involving a controversy over the same claims.

The defense in this case has made an exhaustive presentation in their proofs of the prior art covered by these two claims, and also several cases of alleged prior use of the devices for more than two years before the patent was applied for.

43 It seems to me, in view of the thorough and careful examination which this patent has heretofore received from this and other courts, that the only questions left open for consideration in this case are that of infringement and whether the defendants have shown

by the proof any substantially different state of facts upon the question of novelty than was shown in the earlier litigation. It is true that a larger number of exhibits of former patents illustrating the condition of the prior art are introduced in this case than were introduced or considered in the former cases, but I see nothing in the additional exhibits, patents, models, and drawings offered in this case which is or can be treated as anything but mere cumulative evidence, and nothing which seems to me to any more nearly anticipate the devices here in question than were shown in the Dolph, Zug, Ball, Bartlett, and Bramer devices considered in the former cases. The Bramer patent having been considered by Judge Dyer in the Geneva Lake Manufacturing Co. case, and it appearing in this case that while the Bramer patent is not alluded to in the opinion in Graham *vs.* McCormick, yet it was brought to the attention of the court on a motion for rehearing and strenuously
44 pressed as an anticipation of the complainants' device, and yet notwithstanding this exhibition of the Bramer patent the motion for rehearing was denied—a fact of much cogency to my mind in view of my knowledge of the exceedingly thorough and cautious methods of the late circuit judge of this circuit, before whom Graham *vs.* McCormick was heard.

In regard to all the testimony in this case illustrating the state of the art in the field to which the complainants' invention belongs, both that which has been passed upon in the former cases and that which is brought forward for the first time in this case, it may be said that a review of this proof in the light of what Graham did shows that several inventors who preceded him in point of time groped about or approximated to his device, and it is now comparatively easy with the Graham machine before us to make a Graham machine out of several of these older efforts in that direction; but the fact seems to me to remain unshaken by the proof in this case, as it did in the former cases, that none of them accomplished the result obtained by his invention or made a machine organized and intended to secure such result by the means which he adopted
45 and described. In other words, Graham seems to me to have been the first to embody in a practical working machine the device covered by his patent. A mere mechanic with a Graham machine before him may, without invention, now so alter and improve some of the clumsy attempts at the same object in the older art as to make these machines do what Graham's machine does, but they need the instruction of the Graham device to make those old machines a success. Graham achieved success, while his predecessors in the field had failed.

In the former litigation no attempt was made to defeat the patent by showing prior use for the term of two years before the patent was applied for, except use by the patentee himself, and this use was held to be only experimental, and it becomes necessary for a moment to consider the cases of prior use which are shown in this record. There are three instances of such alleged prior use presented by the defendants and relied upon: First, what is known as the Bradley machine, which is claimed to have been manufactured and sold by

the firm of C. C. Bradley & Son, or the Bradley Manufacturing Co., at Syracuse, N. Y., in 1863 and 1864. In regard to this ma-
46 chine it is sufficient to say that the proof is not satisfactory to my mind that it was made and in use prior to the invention of Graham; second, that it does not, as illustrated by the model produced in evidence, show the free rocking movement which is provided for and obtained in the complainants' patent; and, thirdly, that whatever was contained in this Bradley machine was but an experiment, which was abandoned after a trial of a couple of seasons, and the experiments were never carried so far as to produce an acceptable and practical device like that covered by the complainants' patent.

The proof in this case shows that C. C. Bradley & Sons were manufacturers of harvesting machines at Syracuse, N. Y., under a license from Mr. M. G. Hubbard, the inventor and patentee of the main features of their machine; that in 1862 Hubbard invented the tilting and rocking device which the Bradleys claimed was embodied in the machine now urged as an anticipation of this patent, and yet the proof shows that neither Hubbard nor Bradley ever patented this device, and that, after using it for two seasons, it was abandoned and none thereafter made. With the knowledge that this court has acquired by long experience of the character-
47 istics of inventors and manufacturers, I can hardly deem it probable that if Hubbard had made the improvement shown in the Bradley model he would not have secured it by letters patent, as Bradley was at that time paying him a royalty on all machines manufactured, and this feature was certainly a new and useful improvement, worthy of a patent at that time. The advantages of a floating finger bar, readily adjusting itself to the inequalities of the surface of the ground upon which the machine was to operate, were so obvious and so manifestly a step in advance of the art as it existed at that time that it seems to me that an alert inventor like Hubbard or an intelligent manufacturer like Bradley, who had devised or thought he had devised a practical device for such a finger bar, would have made haste to cover it by a patent, and this improbability certainly goes far in my mind to raise doubt as to whether this machine, even if its use was fully established, could be held to be an anticipation of the complainants' device. A working machine constructed after this model might be said to contain a germ or suggestion of the Graham device, but so imperfect as to be no practical improvement, and I think I am fully supported by the
48 proof in the conclusion that the Bradley machine should be considered as an abandoned experiment.

The next machine presented as an anticipation is what is described as the Preston machine, and the use of it is established by the testimony of Mr. King; H. C. Preston, who testifies that he made a machine in the summer of 1861 at Manlius, N. Y., embodying substantially the features covered by the patent now under consideration and sold it to a Mr. J. L. Pope, a farmer, living at that time near Manlius. The machine itself is not produced, and we have only the unaided recollection of Mr. Preston and Mr. Pope as to

how the machine embodied the features of the first two claims of the complainants' patent. Mr. Preston has put into the case with his deposition an illustrative model of the machine which he made and sold to Pope, which shows a machine very similar, as far as the features in question are concerned, to the Bradley machine as shown by the Bradley illustrative model. In fact, one might conclude that the Bradley machine was but an embodiment of the idea shown in this model. I attach but very little importance to the testimony of Mr. Pope, as he was a farmer, not specially conversant
49 with the construction of harvesters any further than any farmer who has used them, and cannot be supposed to remember after the lapse of over twenty-five years what particular mechanical devices were used to secure a rocking and tilting finger bar in his machine, if the machine contained any such characteristics. Mr. Preston does not, I must say, stand in the best light before the court as a witness, as the proof certainly tends to show that he attempted at least to dispose of his testimony to the highest bidder in this case; but, even if it is all true, it only shows the production of a machine like the Bradley, in which it may possibly be said the embryo of the Graham invention may be found—that is, it is an attempt to secure a floating finger bar, but by different devices from those adopted by complainants or by any of the later machines. From Preston's own testimony given on cross-examination I conclude that this single machine which he says he made and sold to Pope did not contain the devices in question, and the most satisfactory circumstances in support of that conclusion is the fact that Preston afterwards took a patent for an improvement in harvesting machines in which the device in question was entirely omitted, and
50 I cannot believe that he would have failed to claim a patent for such device if he had invented and put it into use. I conclude, therefore, that this one machine made by him and sold to Pope, if it contained any attempt at an adjustable finger bar, was so far a failure in that respect that he did not consider it worth his while to either follow the improvement further or cover it by a patent.

The last case of prior use cited by the defendant is by Frank Bramer. It is claimed on the part of the defendants that Bramer conceived the idea of a machine in the fall of 1862 embodying the adjustable finger bar in substantially the same form in which it is now shown in the defendant's machine, defendant's machine being manufactured under what is known in the art as the Bramer patent, issued in 1865 to this same Frank Bramer. Bramer himself is dead and his testimony is not obtainable in the case, but the proof in regard to his having made this machine at the early day now claimed is so contradictory that I cannot say that it is established so as to come even within the rule contended for by the defendant that Bramer, having obtained a patent at an earlier day than
51 Graham, the burden of proof is shifted from the defendant to Graham to show that he (Graham) really was older in point of invention than Bramer. Taking the testimony as it now stands, I do not think it is established by the defendants that Bramer per-

fected his invention, so far as the floating finger bar is concerned, until some time after Graham's device was perfected and he had made an operative machine. The conduct of Bramer himself in dealing with the owners of this patent after its validity had been sustained by the courts is such as to throw great doubt upon this picked-up testimony from persons who claim now to have had knowledge of the facts in reference to the time when Bramer made his completed machine. Bramer himself must certainly be presumed to know better than these witnesses now produced when he made a machine with a floating finger bar such as is shown in his patent; and if he had, in fact, made such a machine as early as now stated by these witnesses it seems incredible to me that he would have settled or consented to a settlement with the owners of the Graham patent. It must, I think, be conceded that the testimony in regard to prior use has been industriously collected, and if it could
52 all be accepted as true no doubt there is enough in this record to defeat this patent in the light of the late decision of the Supreme Court in Andrews *et al. vs.* Hovey, 41 O. G., 1162.

As to the issue of infringement, Graham secures the tilting and rocking motions of the finger beam by means of the swivel joint M′ which attaches the vibratable link to the body of the machine and the swivel joint M′ located in the draft rod at the joint where the draft rod is attached to the shoe. Defendants insist that their machine does not contain these two swivel joints. Defendants use in place of the swivel joint M′ a ball-and-socket joint, which is in all respects the equivalent of and substitute for Graham's swivel joint. In fact, this ball-and-socket joint as shown in defendant's machine is nothing but a swivel joint, as it is limited to the rotary motion instead of being a universal joint, which is the characteristic of the ball-and-socket joint proper, so that defendant's ball-and-socket joint is in effect nothing but the Graham swivel joint, located at the same place and performing the same function as Graham's swivel joint M′.

53 The defendant's machine is what is known as a front-cut machine—that is, the sickle bar operates in front of the carrying wheel instead of behind it, and the movement of the sickle bar and vibratable link of the machine is accomplished by means of a push bar or thrust rod instead of Graham's drag bar; but Graham provided in his specifications that the cutter bar might be located in front of the wheels, and in that event his draft rod would become a push bar. This change in the location of parts involves some change, of course, in the adaption of the elements of the device to produce the same result in a front-cut machine as in a rear-cut machine; but I find no difficulty in locating the Graham swivel joint M′ in the defendant's machine. Instead of locating this joint in the draft bar where it is connected with the shoe, as Graham does, the defendant has placed the swivel joint in the shoe at the place where the shoe is attached to the vibratable link. This joint in the shoe whereby the cutter bar is attached to the vibratable link, in my opinion, corresponds in function, location, and every other characteristic with Graham's swivel joint M′. The defendant's push

54 rod is attached by a hinge joint to the vibratable link so that the link can rock and thereby rock the cutter bar, thus allowing the defendant's vibratable link the same motion allowed to the Graham link by his swivel joint M′, and, in my opinion, even if the proofs required that Graham should in the construction of his patent be limited to his special devices, I think the defendant has adopted these special devices.

I am, therefore, of opinion that no sufficient defense is made out in this case, and that the complainants are entitled to a decree for an accounting.

Endorsed: Filed Feb'y 20, 1888. Wm. H. Bradley, clerk.

55 Afterwards, to wit, on the eighteenth day of June, 1888, there was filed in said clerk's office a stipulation and the affidavit of William H. Jones in said entitled cause; which said stipulation and affidavit are in the words and figures following, to wit:

Stipulation.

Circuit Court of the United States, Northern District of Illinois. In Equity.

ALVARO B. GRAHAM *et al.*
vs.
PLANO MANUFACTURING COMPANY *et al.*

It is hereby stipulated and agreed that the affidavit of William H. Jones, hereto attached, may be filed and made a part of the record of this cause; that, a reference to a master being waived, a final decree may be hereafter entered on the basis of infringement by the defendants to the extent of forty-six hundred and twenty-four (4,624) machines, as stated in said affidavit; that the rate of royalty applied in the case of these complainants against Cyrus H. McCormick and others, to wit, three dollars ($3.00) per machine, may be accepted and applied in this case, but without prejudice to the right of complainants to recover interest in addition to
56 the aggregate of royalties if the court shall decide that they are entitled to interest, and that as soon as the question of interest is determined a final decree may be entered pursuant to this stipulation and to the court's decision of said question.

It is further agreed that if the rate of recovery per machine shall be hereafter reduced in the McCormick case, either by the supreme court or by the circuit court pursuant to the supreme court's directions, a similar reduction shall be made in this cause, so that the defendants in this cause shall not be required to pay any more per machine, except as to interest, if the court shall allow interest, than the defendants in the McCormick case.

BANNING & BANNING,
Solicitors for Complainants.
COBURN & THACHER,
Sol'rs for Def'ts.

57 *Affidavit.*

STATE OF ILLINOIS, }
County of Cook, } ss:

United States Circuit Court, Northern District of Illinois. In Chancery.

ALVARO B. GRAHAM *et al.*
vs.
THE PLANO MANUFACTURING COMPANY *et al.*

William H. Jones, of lawful age, on oath deposes and says: I reside at Evanston, Illinois, and am the president of the Plano Manufacturing Company, and have held said office of president since the organization of the said company. We commenced the manufacture of the mowing machines called the "New Warrior," substantially like the exhibit of defendants' machine in the above-entitled cause, in 1882, building our first machines for the season of that year. The machine was changed somewhat in the season of 1883 for the season of 1884, and has since been called the "New Plano" mower. I have carefully examined the books of the company to determine the exact number of said machines built by the said company from the commencement of their construction to February 11, 1885, when the patent No. 74342, on which said suit is
58 based, expired, and the following is a correct statement as the result of said examination:

In 1882 the company built of said machines	693
" 1883 " " " "	2,117
" 1884 " " " "	1,778
" 1885, up to February 11th, the company had completed and sent out from the factory of said machines	36
Making the total number of machines	4,624

In the above statement I have included the entire number of machines made without any regard as to whether they were all sold or not. In the statement are also included a number of machines, especially in 1883, which were old machines returned and rebuilt, but I am unable to determine the exact number of such machines, and so have attempted no deduction from the gross number built on account of these repaired or reconstructed machines.

In regard to the number of machines given for 1885 I have to state that the manufacture of mowing machines for the season of any year is in progress during the winter and spring preceding; hence during the winter of 1884–'5 there were a number of machines in process of construction much larger than the number 36 included in the statement. It is utterly impossible, however, to determine from the books of the company or in any other way
59 & 60 how many such machines were in process of construction at the date of the expiration of said Graham patent, and it is

also impossible to state in what stage of the manufacture said machines or any of them were at the date named. The number 36 is the entire number of said mowing machines completed and shipped out from the factory on or before the date of the expiration of the patent, February 11, 1885. It is our general custom to ship out such machines as fast as completed. I have included in the above statement all the mowing machines built by the said company and called either the New "Warrior" or the New "Plano."

WILLIAM H. JONES.

Subscribed and sworn to before me this 11th day of May, A. D. 1888.

[SEAL.] CARRIE FEIGEL,
Notary Public.

Endorsed: Filed June 18, 1888. Wm. H. Bradley, clerk.

61 On the same day, to wit, on the eighteenth day of June, in the adjourned May term of said court, 1888, in the record of the proceedings thereof in said entitled cause, before Hon. Henry W. Blodgett, district judge, is the following entry, to wit:

Order.

ALVARO B. GRAHAM
vs.
PLANO MANUFACTURING COMPANY *et al.* } In Chancery.

On motion of complainant's solicitors it is ordered that the death of the complainant, Hugh Graham, be suggested of record, and that Peter Whitmer, administrator of his estate, be made a party complainant in his stead, the cause then to proceed in the name of Alvaro B. Graham and said administrator as complainants.

62 Afterwards, to wit, on the thirtieth day of June, in the adjourned May term of said court, 1888, in the record of the proceedings thereof in said entitled cause, before Hon. Henry W. Blodgett, district judge, is the following entry, to wit:

Decree.

ALVARO B. GRAHAM and PETER WHITMER, Administrator of the Estate of Hugh Graham, Deceased,
vs.
PLANO MANUFACTURING COMPANY, WILLIAM H. Jones, Edgar L. Henning, George W. Chamberlain, Frederick J. Huse, and Elijah H. Gammon. } In Chancery.

This cause having been heretofore heard on pleadings and proofs, *and* the court, being now fully advised in the premises, doth order, adjudge, and decree as follows:

1. That letters patent of the United States number 74342, issued

on the eleventh day of February, A. D. 1868, to Alvaro B. Graham for an improvement of harvesters, being the letters patent mentioned in the bill of complaint herein, are in all respects good and valid in law, so far as regards the first and second claims thereof (the
63 only claims in suit), and that the complainants are the exclusive owners of said letters patent and entitled to sue for and receive all damages and profits arising out of or accruing from infringements thereof, as alleged in said bill.

2. That The Plano Manufacturing Company, the defendant herein, has infringed upon said letters patent and upon the exclusive rights of the complainants under the same by manufacturing and selling harvesters or mowing machines embracing and containing and having on them as a part thereof the inventions and improvements described in said letters patent and mentioned and claimed in the first and second claims thereof during the years 1882, 1883, 1884, and 1885, as alleged in said bill.

3. It now appearing to the court that said parties, waiving a reference to a master, have agreed upon the number of infringing machines which the defendant should account for, the same being fixed at four thousand six hundred and twenty-four (4,624) machines, and on the rate which the complainants are entitled to recover per machine, the same being fixed at three dollars ($3.00) a machine, the court, having heard arguments on the question whether interest should be allowed in addition to the three dollars ($3.00) per machine, doth further order, adjudge, and decree that
64 the complainants have and recover of and from the defendant, The Plano Manufacturing Company, the sum of thirteen thousand eight hundred and seventy-two dollars ($13,872.00) as royalties, at three dollars ($3.00) per machine, on four thousand six hundred and twenty-four (4,624) infringing machines, and also the costs of suit, to be taxed at — dollars and — cents, and that execution issue for said damages and costs, but that the complainants recover no interest on said royalties prior to the entry of this decree.

4. That the bill of complaint herein be dismissed, but without prejudice to future suits or proceedings as to the defendants, William H. Jones, Edgar L. Henning, George W. Chamberlain, Frederick J. Huse, and Elijah H. Gammon. Thereupon the defendant, The Plano Manufacturing Company, prayed an appeal to the Supreme Court of the United States, which is allowed upon its filing a bond in the sum of twenty-five thousand dollars ($25,000), with sureties, to be approved by the court.

65 *Complainants' Prima Facie Evidence.*

Testimony taken on the part of the complainants, before Charles C. Linthicum, notary public, at the office of Messrs. Banning & Banning, Chicago, Illinois, Tuesday, September 2nd, 1884.

Present: Ephraim Banning, Esq., of counsel for complainants and J. M. Thacher, Esq., of counsel for defendants.

Mr. BANNING: I offer in evidence the following instruments and exhibits, namely:

1. A copy of letters patent of the United States No. 74342, issued to Alvaro B. Graham February 11th, 1868, for an improvement in harvesters, and the same is marked "Complainants' Exhibit Graham Patent."

2. Assignment under letters patent No. 74342 and other patents from Alvaro B. Graham to Hugh Graham, dated August 12, 1870, and recorded in the United States Patent Office September 12th, 1870, in Liber H 13, page 329, of Transfers of Patents, and the same is marked "Complainants' Exhibit Graham Assignment."

3. Agreement under letters patent No. 74342 and other patents between Alvaro B. Graham and Hugh Graham, dated August 12th, 1870, and the same is marked "Complainants' Exhibit Graham Agreement."

4. A model of the invention described in letters patent No. 74342, particularly intended to represent the parts and combinations mentioned in the first and second claims thereof, and the same is marked "Complainants' Exhibit Graham Model."

5. A full-sized Warrior mower manufactured and sold by the defendants, being one of the machines now claimed to infringe the first and second claims of patent No. 74342, and the same is marked "Complainants' Exhibit Defendants' Machine."

66 6. One of the printed circulars issued and circulated by the defendants for the purpose of advertising their machines, and the same is marked "Complainants' Exhibit Defendants' Circular."

Mr. THACHER: Counsel for defendants admits that the Plano Manufacturing Company made and sold mowing machines like the machines offered in evidence and marked "Complainants' Exhibit Defendants' Machine" prior to the commencement of this suit. Counsel for defendants objects to the model just offered in evidence above as not properly identified.

WILLIAM S. BATES, a witness produced, sworn, and examined on the part of the complainants, deposes and testifies as follows in answer to questions by Mr. BANNING:

Q. 1. State your name, age, occupation, and place of residence.

A. William S. Bates; 32 years; civil and mechanical engineer; Chicago, Illinois.

Q. 2. State what experience you have had, if any, in connection with patents and as an expert in patent litigation.

A. I was for a number of years engaged as a solicitor of patents, during which time I prepared and prosecuted applications for letters patent for a great variety of mechanical devices, and during that time and since I have been frequently called upon to examine the specifications and drawings of letters patent and to compare them with each other and with various mechanical devices for the purpose of determining questions of similarity and difference in construction and operation. I have been and am very often called upon to testify as an expert in patent cases, and have so testified a great many times.

67 Q. 3. Have you examined the specification and drawings of patent No. 74342, sued on in this cause, and do you understand the inventions and combinations mentioned and claimed in its first and second claims?

A. I have examined them frequently and believe I understand the invention referred to. I have heretofore testified as an expert in other cases under this patent.

Q. 4. Have you examined the full-sized Warrior mower offered in evidence in this cause as the "Complainants' Exhibit Defendants' Machine," and do you understand its construction and operation?

A. I have examined the Warrior mower referred to and believe I understand its construction and mode of operation. I have examined it particularly with reference to giving testimony in this suit.

Q. 5. State whether, in your opinion, said Warrior mower contains the inventions and combinations described and shown in this patent No. 74342, particularly mentioned and claimed in the first and second claims thereof, and give your reasons fully for any opinions you may express.

A. I have made the comparison requested, and find that the defendants' new Warrior mower does contain the inventions described and shown in this Graham patent No. 74342 and claimed in the first and second claims thereof. My reasons for this opinion are as follows:

The first claim of the Graham patent, as I understand it, describes a combination of—

1. A finger beam;
2. A gearing carriage;
3. A vibratable link connecting the finger beam with the gearing carriage;
4. A draft or thrust rod through which the draft is transmitted to the finger beam;

68 5. A swivel joint, marked M in the drawings, connecting the vibratable link to the gearing carriage; and,

6. A swivel joint, marked M^1, connecting the draft or thrust rod to the shoe or vibratable link.

The function and object of this combination, as I understand it, are as follows: The finger beam is loosely connected to the gearing carriage by means of the vibratable link and draft rod, so that it

may rise and fall independently of the gearing carriage. The swivel joints permit it to rise and fall at either end independently of the other and to rock or oscillate forward and back or in the direction of the motion of the machine so, that the finger points may rise and fall and the beam follow the surface of the ground in all directions.

Turning now to the defendants' New Warrior mower, I find in it a combination of—

1. A finger beam;
2. A gearing carriage;
3. A vibratable link connecting the finger beam with the gearing carriage;
4. A thrust or push rod connecting the finger beam and vibratable link with the rear end of the gearing carriage;
5. A ball-and-socket joint connecting the vibratable link to the gearing carriage corresponding to the joint M in the Graham patent; and,
6. A swivel joint connecting the thrust rod and vibratable link corresponding to the joint M^1 in the Graham patent.

The function performed by these devices as combined in the defendants' New Warrior mower is to form a free connection of the finger beam to the gearing carriage, so that the beam may rise and fall independently of the carriage, and may rise and fall at either end independently of the other, and may rock or oscillate
69 forward and back or in the direction of the motion of the machine, so that the finger points may rise and fall and the beam follow the surface of the ground in all directions.

This is exactly the function performed by Graham's combination, and it is performed in the same way and the object attained is the same, and I am therefore of the opinion that this New Warrior mower contains the inventions set forth in the first claim of the Graham patent 74342.

In giving this opinion I have consider- the fact that there are certain structural differences between the two machines. For example, in the New Warrior machine the swivel joint on the push rod is divided so as to be more properly a two-way joint, one pivot being between the vibratable link and the finger beam and the other being on the vibratable link between it and the push rod instead of between the push rod and the first-mentioned pivot. This difference I consider to be immaterial, as it does not affect the rising and falling of the finger beam or its rocking back and forth, but permits it to rise and fall and rock exactly as it does in the Graham machine. It is worthy of mention that the other end of the push rod in the New Warrior machine has a loose connection with the gearing carriage, just as the Graham draft rod has, this connection being on the Graham a snipe-bill joint and in the New Warrior a slot and a loosely fitting bolt passing through it.

The ball-and-socket joint in the vibratable link of the New Warrior is in the same relative position as the swivel in the Graham, and is the full mechanical equivalent of the swivel, ball-and-socket joints and swivel joints having been well-known substitutes for each other at the date of Graham's invention.

The New Warrior machine is a front-cut machine instead
70 of a rear-cut, as is shown in Graham's drawings, but front-cut machines are referred to in the Graham specification in the following words: "My improvements may be embodied in a maching having the finger beam arranged in advance of the axial line of the shaft or arbor of the driving wheel or arranged in the rear of that axial line. In the former case the vibratable link that connects the finger beam with the gearing carriage will be arranged in advance of the driving wheel and in the latter case in the rear of the driving wheel. In the former case also the rod hereinbefore called a draft rod (because the strain to which it is subjected is a pulling strain) becomes a pushing or thrust rod and connects the inner end of the finger beam with the rear end of the gearing carriage." This is exactly the New Warrior machine, and the changes which I have mentioned in the joints are simply such as would be made by any ordinary mechanic in making a front-cut machine from this specification, if for any reason he found it convenient to make any changes at all. These are the only differences worth mentioning between the two machines, and that they are mere structural differences is, I think, obvious from the operation of the two machines.

In both machines the finger bar rises and falls at either end independently of the other, and it does this by means of its pivotal connection with the vibratable link, the joint between the link and the gearing carriage, and the joint between the draft or push rod and the vibratable link; and in both machines the finger bar rocks forward and back so as to raise or depress the finger points, and in both machines it is permitted to do this by means of the swivel on the vibratable link connecting it to the gearing carriage and by means of the pivotal connection of the draft or push rod to the vibratable link.

The second claim of the Graham patent, as I understand it, is for
a combination of elements which includes those embraced
71 in the first claim, with the addition of an arm by which the rocking of the finger beam is controlled. This arm in the Graham machine is an arm on the vibratable link and is connected with a lever within reach of the driver on his seat, so that he can raise or depress the finger points at will. In the New Warrior machine there is a projection or arm on the vibratable link projecting backward and operated on by a lever within reach of the driver on the machine. By operating this lever the driver can cause the finger points to rise or fall at pleasure. This is exactly the purpose and function of these devices in the Graham machine, and the two machines are identical in this respect, with the single exception that in the Graham the arm projects upwardly, whilst in the New Warrior it projects backward. The connection between this arm and the hand lever is slightly different in the two machines, but this difference is a mere structural one, one which might be made by any mechanic without invention, and is therefore, in my opinion, entirely immaterial. Besides this the connecting means is not

mentioned in the claim, and it is entirely at the option of the maker what means he shall adopt.

Therefore, as the New Warrior machine contains all the elements of Graham's second claim, either in the exact form illustrated by Graham in his patent or in a well-known equivalent form, and as these elements are all combined together in the same way and operate in combination to perform the same functions in the same manner and for the same purpose, I am clearly of the opinion that the New Warrior machine contains Graham's invention as defined in the second claim of his patent No. 74342.

72 Q. 6. As I understand you, you say that in the defendants' machine the swivel joint M^1 is divided, the axis horizontal to the rod being at exactly the same place as shown in the Graham drawings and the axis transverse to the rod being at a slightly different position, but otherwise the same as shown and described in the Graham patents?

Mr. THACHER: Objected to, for the reason that, while purporting to give a statement made by the witness in his last answer, it does not do so correctly, but enlarges greatly upon it in an explanatory way, and is therefore leading.

A. The idea that I meant to convey was simply this: In both machines there is a two-way joint between the draft or thrust rod and the finger beam. In the machine illustrated by Graham the axis which is transverse to the finger bar and longitudinal of the rod is at the connection between the vibratable link and the finger bar, and it is in the same place in the New Warrior machine. In the Graham machine the axis which is longitudinal of the finger bar and transverse to the rod is directly in line with the first-mentioned axis, whilst in the New Warrior machine it is not in line with it, but is a little back of it—at the point where the push rod meets the vibratable link. If the push rod were outside of the main wheel, as it is in Graham's, instead of inside of it, then this last-mentioned axis would be in exactly the same position in both machines, but the rod being inside of the wheel the axis is necessarily moved inward a little to correspond to the new position of the rod. This is a change which follows from the transposition of the rod, and is one that any mechanic would make from his knowledge of his trade. It does not change the purpose or effect of the axis in any way, and therefore is a mere structural variation and not material.

73 Q. 7. Look at this model now shown you, marked "Complainants' Exhibit Graham Model," and state what it represents.

A. It represents that part of the machine described and illustrated in the Graham patent No. 74342 which relates to the combination claimed in the first and second claims of the patent.

Q. 8. Is it a correct embodiment and representation of the elements and combinations mentioned in said two claims now in suit?

A. It is. I intended to convey that idea in my last answer.

Adjourned till Wednesday, Sept. 3, at 2 o'clock p. m.

SEPTEMBER 3.

Said parties met pursuant to adjournment.
Present: As before.

Cross-examination by Mr. THACHER:

X Q. 9. What familiarity have you with the state of the art relating to harvesters and mowing machines prior to the date of this Graham patent?

A. I have examined a good many patents for harvesting and mowing machines of prior date to Graham's.

X Q. 10. Have you ever carefully investigated the entire prior state of the art illustrated by all United States patents for harvesters and mowing machines issued before 1868 so that you are fully informed as to the exact relations which this Graham patent has to such prior state of the art?

A. I have examined a great many patents which were set up in the answers in two cases on this same Graham patent, but whether they were all that had been issued and had any bearing on the Graham patent I do not know. I have not examined all the mower and reaper patents that have been issued.

X Q. 11. What, if any, practical experience have you had in the working of mowing machines?

A. I have seen a good many worked, and have myself used the Clipper mower considerably.

74 X Q. 12. What machines have you seen at work in the field? Give their names as you remember them.

A. I have seen, I think, the Buckeye, the Champion, and the Clipper mowers and some harvesters. I have also seen a good many that I do not know the names of.

X Q. 13. Are any of these mowing machines which you have named of the same type as the Graham machine shown in the complainants' patent?

A. They are all mowing machines, and some of them are combined mowers and reapers. If you refer to Graham's first and second claims, none of the machines that I have named are of the same type, as I remember them.

X Q. 14. I refer to certain features of construction which are recognized among those familiar with mowing machines as giving a particular type to a certain class of machines, which is recognized by the name generally given to such class of machines. To what type or class of machines do you understand the Graham patented machine belongs, referring now to this machine only as a mower?

A. I do not carry these arbitrary distinctions and names in my mind, and therefore cannot say, unless you ask more specifically.

X Q. 15. Is it not a fact that you do not know what these distinctions are?

A. It may be. I do not know just what distinctions you refer to.

X Q. 16. This piece, which is designated in the Graham patent a vibratable link, do you know whether or not that device, merely as a means for uniting the finger bar to the main frame, was very much older than Graham's invention?

A. It was older, I believe; I do not know how much.

X Q. 17. Do you know what name has generally been given to this piece?

A. I do not.

75 X Q. 18. Have you ever seen or heard it named "coupling arm?"

A. I may have. I do not remember it.

X Q. 19. This other device, which connects the shoe to the inner front corner of the main frame in the Graham machine, that was very much older than Graham's invention, was it not?

A. You mean the draft rod, I suppose. I understand that it is older than Graham's invention.

X Q. 20. Did the Clipper mowing machine, which you say you used, have a rocking finger beam?

A. As I remember it, it did not.

X Q. 21. How long ago was that?

A. I think it was five or six years since I last saw it; it may have been one year or two years more than that since I last used it.

X Q. 22. Do you understand that Graham was the first to produce a mowing machine with a rocking or tilting finger beam?

A. No, sir; but he was the first to produce one by which this rocking or tilting was secured by the means which he claims.

X Q. 23. Do you understand that Graham was the first to produce a machine with a finger beam and a hinged link or "coupling arm," as I prefer to call it, connecting the finger beam to the main frame, and both of them capable of rocking or rolling together?

A. I do not now remember any prior machine which had that arrangement, but whether there was one or not Graham was the first to produce a machine securing those features by his peculiar means.

X Q. 24. Do you know whether or not a patent was issued in 1867 to this same A. B. Graham for a harvester or mowing machine?

A. I think there was. I think I have examined such a patent.

X Q. 25. Do you remember whether or not in that patent

76 Graham disclaims as old the swivel joint, by which the vibratable link is connected to the main frame and which corresponds to the joint M in the patent sued on?

A. I do not.

X Q. 26. In the old machines of the same type as this Graham machine, which, if you please, I will designate as "drag-bar" machines, the drag bar or draft rod, as it is called in the present patent, was usually either in one piece with the shoe or rigidly connected to the front end of the shoe, was it not?

A. That was a common form of construction.

X Q. 27. Now, in order to permit the finger beam in such a machine to tilt or rock it is absolutely necessary, is it not, to put a joint in the drag bar somewhere in front of the shoe?

A. It is necessary to do that, or else to arrange the drag bar so that its front end can play up and down.

X Q. 28. In machines of this type—that is, having a drag bar

and a coupling arm both hinged to the main frame, but without any provision for rocking the finger beam (which construction was much older than Graham)—what kind of a joint do you understand was that by which the outer end of the coupling arm or vibratable link was connected to the main frame?

A. It may have been a plain hinge joint; some of the older machines were of that character, I think.

X Q. 29. Do you mean by that that it was a tight hinge joint, like a door hinge, for instance?

A. Yes, sir.

X Q. 30. What kind of a joint do you understand was used at the forward end of the drag bar to connect it with the main frame in that old construction of machine?

A. A plain hinge in some cases, though I think it probable that the snipe bill was used in some cases, as that is a common and cheap form of joint.

77 X Q. 31. By a plain hinge in your last answer, do you also mean a tight hinge joint?

A. Yes, sir; like a door hinge.

X Q. 32. In that old construction of machine, as well as in the Graham patented machine, it was always contemplated to raise and lower the cutting apparatus bodily, was it not?

A. Yes, sir.

X Q. 33. And in doing this it was necessary to lift up the inner shoe bodily from the ground, was it not?

A. To lift it or lower it, as the case might be.

X Q. 34. Now, won't you look at the Graham patent drawings and complainants' model Graham's machine and explain to the court how, with a tight or butt hinge joint at the outer end of the coupling arm or vibratable link and a like joint at the forward end of the drag bar, the inner shoe could be raised from the ground bodily in the older machines of this type, which we have been talking about, and in which there was no joint in the drag bar at the forward end of the shoe?

A. One machine which I have in mind had the drag bar connected with the coupling arm by means of a loop in the end of the drag bar which loosely encircled the coupling arm. That would allow play enough to permit the vertical motion of the inner shoe. Of course, with a close, tight joint between the drag bar and shoe or coupling arm such motion would be impossible.

X Q. 35. And this because the shoe in this vertical motion moves in the arcs of two circles, is it not?

A. Yes, sir; two circles with different centers.

X Q. 36. The planes of these two circles would be perpendicular to each other, would they?

A. Yes, sir; or substantially so.

X Q. 37. Now, with close connections at the shoe, how
78 would you change the butt hinge joints at the other extremities of the coupling arm and drag bar in order to permit the free raising and lowering of the shoe?

A. The only perfect way to do it is the one adopted by Graham,

so far as I can see—that is, by a swivel joint on the coupling arm. It might perhaps answer to make the coupling arm capable of a backward swing as well as a vertical swing, but that would strain the joint between the drag bar and the shoe.

X Q. 38. The obstacle to the raising and lowering of the shoe with the tight hinges, which we have been talking about, would be the binding or friction at these hinges; would it not?

A. Not exactly, as the raising and lowering of the bar could be secured by making the hinges capable of sliding on the frame of the machine. The obstacle is that when the shoe rises the distance between it and the fixed points at the other ends of the two bars is less than when it is depressed, unless it is so arranged that it can twist or yield sideways.

X Q. 39. Suppose you connect the outer end of the coupling arm and the forward end of the drag bar to the frame by loose hinge joints, instead of tight or butt hinges, would that obviate the difficulty and permit the shoe to be raised and lowered freely?

A. If they were loose enough to permit the required lateral play of the opposite end of the bar or arm.

X Q. 40. Now, don't you know, as a matter of fact, that in building those old drag-bar machines without the rocking finger bar it was an ordinary expedient to make the hinge joints uniting the coupling arm and the drag bar to the main frame loose, in order to permit this vertical movement of the inner shoe, which was absolutely necessary to the practical working of the machine?

A. It may have been; I do not know whether it was or not.

X Q. 41. If such was the construction of those old ma-
79 chines, I suppose you do not understand the swivel joint M in this Graham patent to include a loose hinge joint, do you?

A. I suppose it does not; still I am not sure but what it might be possible to make such a loose joint to take the place of and be equivalent for the swivel.

X Q. 42. It is an ordinary expedient in mechanics, is it not, to make a hinge joint loose where there is some change in the relation of the members connected by the hinge which would produce more or less binding?

A. It may be done sometimes, but it is bad practice.

X Q. 43. This expedient is about as old as the hinge joint itself, is it not?

A. I think it likely.

X Q. 44. Won't you explain to the court just what you understand to be meant by "the two swivel joints M and M^1" in the first claim of the Graham patent?

A. It means the swivel joint in the vibratable link and the swivel joint in the draft rod which co-operate with the other elements of the combination to permit the finger bar to rise and fall at either end and to rock forward and back.

X Q. 45. Please explain a little more minutely the construction of these two joints contemplated by this claim of the patent.

A. In the machine illustrated and specifically described in the patent the joints are ordinary swivel joints. The claim does not

specify any particular construction, but simply designates the two joints, one in the vibratable link and one in the draft rod. The patentee states in his specification that he does not limit himself to the particular forms represented in the drawings, and therefore I understand the claim is not limited to a specific construction, but includes such variations as would be made by the ordinary mechanic from his knowledge of his trade.

80 X Q. 46. Describe the construction of what you have termed an ordinary swivel joint.

A. An ordinary swivel joint is one which permits a twisting or turning of the two members connected by it with reference to each other. Graham's swivel joints are really two-way joints, and permit such twisting and turning, and also an oscillating motion of one member with reference to the other.

X Q. 47. Do you mean that an ordinary swivel joint is one with two axes, the one at right angles to the other, or substantially so?

A. An ordinary swivel has but one axis, and I suppose a swivel joint is the same; but Graham's joints M and M^1 have two.

X Q. 48. Then they are not ordinary swivel joints, are they?

A. They are ordinary swivel joints with the addition of a second axis.

X Q. 49. But I understand you that the language in the claim quoted, which speaks of these joints as swivel joints M and M^1, means the joints with double axes. Is that your understanding of the claim?

A. Yes, sir.

X Q. 50. Then this language means something more than ordinary swivel joints, does it?

A. The language is simply designatory, and means the joints at the points M and M^1. These joints, strictly and technically, are something more than mere swivel joints—they are two-way joints.

Adjourned till Thursday, September 4th, at 10 o'clock a. m.

SEPTEMBER 4TH.

Said parties met pursuant to adjournment.

Present: Thos. A. Banning, Esq., of counsel for complainants, and same as before for defendants.

X Q. 51. You have used this term "two-way joint" several times. Won't you explain what you mean by a two-way joint?

A. I mean joints having two axes permitting oscillation or motion in different planes—commonly at right angles to each other.

81 X Q. 52. This kind of joint is substantially a gimbal joint, is it not?

A. A gimbal joint is a common form of a two-way joint.

X Q. 53. This joint is a very old and well-known mechanical device, where the two members which are hinged together must have movement in different planes, is it not?

A. Yes, sir.

X Q. 54. What is the meaning of the term "vibratable" applied to "link" in the first and second claims of the Graham patent?

A. It means capable of vibrating or oscillating and turning on its joint.

X Q. 55. Does not this term "vibratable" refer merely to the vertical motion of the link or coupling arm? The rocking movement would be correctly described by the term "oscillating," would it not?

A. Vibration implies motion back and forth, and I do not see why it does not apply to the rocking just as much as to the rising and falling motion of the link. The term "vibratable link" is simply the name given to this piece in the patent.

X Q. 56. What is the difference between the first and second claims of the Graham patent?

A. The second claim includes the arm by which the rocking of the finger beam is controlled, whilst the first claim makes no mention of such arm.

X Q. 57. In other respects the elements of the combination in each claim are the same, are they?

A. Yes, sir; as I understand it.

X Q. 58. Then the first claim does not contemplate any device by which the finger beam may be rocked by the attendant, while the second claim does contemplate such a device in addition to the devices entering into the combination set forth in the first claim. Is this your understanding of these two claims?

A. Yes, sir.

82 X Q. 59. If I understand your explanation of the second claim in your direct examination, you think the arm mentioned as an element refers only to the piece directly attached to the vibratable link and serving as a lever by which to rock this link, and the device or devices by which the attendant moves this arm are not to be taken into consideration. Is this your understanding of the claim?

A. The devices by which the attendant acts on the arm are, of course, necessary in practice; but as their form of construction has no effect whatever upon the function or purpose of the combination they are, of course, not to be taken into consideration in the reading of this claim.

X Q. 60. Suppose this arm was made long enough and bent in such way as to bring it within reach of the attendant, so that he could rock the link by taking hold of the end of the arm and vibrating it, would that meet the requirements of this second claim, as you understand it?

A. Yes, sir.

X Q. 61. What necessary connection is there between the rocking finger beam and the arm by which it may be turned or rocked and the other elements which are mentioned in this second claim?

A. They all co-operate in the make-up of that part of the machine having a controllable rocking finger beam, which can also rise and fall at either end to follow the surface of the ground.

X Q. 62. Suppose you should find in an older machine a finger beam connected to the frame by a piece hinged or pivoted so as to be capable of oscillating and so rocking the finger beam, and an arm

or lever connected to this piece by means of which the attendant could turn it and so control the rocking of the finger beam, but the exact devices of draft rod and swivel joint as shown in
83 the Graham patent absent, perhaps; the arm or lever would have precisely the same function in that machine as in this patented Graham machine, would it not?

A. The final result would be the same so far as the arm alone was concerned, as I understand your imaginary machine, but whether all the functions would be the same or not I cannot say without having something more definite on which to base an opinion.

X Q. 63. Has this arm in the Graham patent any other function than to rock the finger beam?

A. It is one element of the combination by which certain desirable results are secured, and it plays its part with the other elements in the combination. It cannot be considered by itself alone.

X Q. 64. I ask the question again: In the Graham patented machine has this arm any other function than that of rocking the finger beam?

A. Considered by itself alone, that is its function; but you should also consider the other elements in the combination, as they all act together to secure that rocking in a certain definite manner.

X Q. 65. Suppose the finger beam and coupling arm were made capable of rocking by some other means than those shown by Graham; this would not at all change the function of this arm, would it? It would still operate in the same way to rock the finger beam by moving it back and forth, would it not?

A. The function might be the same, perhaps, but whether it was performed in the same way I cannot tell without having the rest of the combination before me.

X Q. 66. Suppose you should find in a machine older than Graham's invention a finger beam hinged to a piece which in turn is pivoted or hinged to the frame, so that it may be oscillated to rock the finger beam and the arm or lever attached to this piece
84 which the attendant moves back and forth, and thereby controls the rocking motion of the finger beam; as an expert in mechanics and patent matters, do you think it would require invention to remove that arm or lever from the old machine and attach it to the rocking piece, which is the link of the Graham machine, where it would operate in the same way—that is, be moved back and forth to perform the same work—that is, oscillate this piece and so rock the finger beam?

A. If the mere transportation of the arm were the only changes required, I should not call it invention.

X Q. 67. The joint by which the forward end of the draft rod is connected to the frame in the Graham patent is one kind of loose hinge joint, is it not?

A. It is a snipe-bill joint; it takes the place of a hinge frequently.

X Q. 68. It is a loose joint, is it not, and permits motion of the connected parts in different planes?

A. Yes, sir.

X Q. 69. You said in your direct examination that the joint by which the rear end of the thrust bar is connected to the frame in defendants' machine is substantially the same as this loose joint by which the front end of the draft rod is connected to the frame in the Graham patent. Now, if this is so, the joint M^1 of the Graham patent, if found at all in defendants' machine, must be the hinge joint at the front end of the thrust bar by which it is connected to the coupling arm, must it not?

A. Half of it is at that point—the half which permits the rocking of the bar; the other half, which permits its rising and falling, is at the shoe.

X Q. 70. Does the joint M^1 in the Graham patent have anything to do with permitting the rising and falling of the shoe bodily?

A. Certainly it does.

X Q. 71. Do you mean to say that if the joint M^1 was
85 absent in the Graham patented machine the inner shoe could not rise and fall bodily or could not be raised and lowered vertically?

A. No, sir; but the two ends could not rise and fall independently of each other.

X Q. 72. Do you mean that in defendants' machine half of the swivel joint M^1 is found at the hinge which connects the finger bar to the coupling arm?

A. Yes, sir.

X Q. 73. Then if in any machine we find the coupling arm with the finger beam hinged to its free end, as in defendants' machine, and the thrust bar hinged at its forward end to the coupling arm, we would have all the elements of the Graham patented machine except the swivel joint M, would we not?

A. We might.

X Q. 74. Suppose a machine constructed like the defendants' machine, except that the coupling arm is connected to the frame by an ordinary hinge joint instead of a swivel or two-way joint; it would be necessary to have the joints between the coupling arm and the thrust bar and the main frame somewhat loose in order to permit the coupling arm to be vibrated up and down for the purpose of raising and lowering the cutting apparatus, would it not?

A. Yes, sir.

X Q. 75. Now, suppose that you should find that a machine substantially like the defendants', except an ordinary hinge joint connecting the coupling arm with the main frame, to be older than Graham's invention, and you should also find a coupling arm or some equivalent device and a finger beam hinged to it connected to the frame of a machine or some other suitable support by a two-way joint or some other joint which permits the coupling arm and finger beam to rock and roll also to be older than Graham's invention, though found, we will now suppose, in a machine in other re-
86 spects different from defendants' machine; do you think it would require invention to substitute such a rocking coupling

arm and finger beam in place of the coupling arm and finger beam in the machine first named?

A. It might or might not. It would be impossible for me to say definitely without having the machine before me. It sometimes requires a very great deal of invention to make an apparently very little change.

X Q. 76. Suppose in defendants' machine you make the joint by which the coupling arm is connected to the frame an ordinary hinge joint instead of a two-way joint; the machine would still then have all the capabilities it has now, except the rocking of the finger beam—that is, the finger beam could rise and fall at either end independently of the other, and could be raised up bodily by lifting up the coupling arm. That would be the result, would it not?

A. The swivel in the coupling arm co-operates with that piece in permitting the rising and falling of the beam. If there were no swivel there, but simply a plain hinge, the joint would be very much strained, if not broken, when the beam was raised.

X Q. 77. By an ordinary hinge joint I do not mean a butt hinge joint, but such a loose hinge joint as is ordinarily used by the mowing-machine makers at these points. Now, with this explanation, how will you answer the preceding question?

A. A sufficiently loose joint would permit the rising and falling of the beam, but such a joint is not permissible at that point, owing to the pull and thrust of the pitman. The joint should be a close joint.

X Q. 78. And in order to permit this construction you have mentioned in your last answer all that is necessary is simply to make the joints at the two ends of the thrust bar sufficiently loose to
87 allow the coupling arm to be vibrated up and down in the same vertical plane. That is so, is it not?

A. That would not do, because in that case the thrust bar would not take the strain away in the operation in all positions, but the strain would come on the joint of the coupling arm.

X Q. 79. With the ball-and-socket joint connecting the coupling arm to the frame in defendants' machine, does the coupling arm vibrate vertically in the same plane to raise and lower the inner shoe or does it vibrate in different planes?

A. The joint being a ball and socket, it vibrates in different planes.

X Q. 80. How would it be, suppose, for the ball-and-socket joint, to substitute a two-way joint, M, in the Graham patent?

A. In that case the coupling arm would move in the same plane, but the bar would rock a little.

X Q. 81. If I understand you, the short stud or projection extending out a little way from the rear edge of the coupling arm in defendants' machine is, in your opinion, the equivalent of the arm on the vibratable link in the Graham patent, and which is mentioned as an element of the combination in the second claim of this patent. Is this your opinion?

A. Yes, sir.

X Q. 82. In the Graham patented machine the arm attached to the

vibratable link is moved positively back and forth by a stiff connecting rod, so as to control the rocking of the link and finger beam in both directions, is it not?

A. Yes, sir.

X Q. 83. This is not so in defendants' machine, is it?

A. Not exactly. Defendants' machine depends on the natural tendency of the finger points to turn down, and does not provide any means of forcing them down. This might be relied upon also in the Graham machine just as well.

88 X Q. 84. Do you mean, if left free, the points of the fingers in defendants' machine would turn down and stick into the ground?

A. They will turn down, but whether enough to stick into the ground or not I do not know.

X Q. 85. Can you tilt the finger beam so as to turn the points of the fingers downward from their normal position in mowing in defendants' machine?

A. They cannot be turned vertically downward nor even approximately so, but they can be turned downwardly from a horizontal line.

X Q. 86. Positively, do you mean? If so, what device on the machine will act on them to turn them downward?

A. There is no device for that purpose; I meant simply that they were capable of that motion.

X Q. 87. In the Graham patent the draft rod or drag bar is outside of the inner supporting wheel, and the swivel joint M^1 is immediately at the front end of the inner shoe. In order to apply this improvement of Graham's to a front-cut machine, or, in other words, to transform the Graham machine into a front-cut machine, as intimated in the Graham patent, do you not think the thrust bar should be on the outside of the inner supporting wheel and jointed at its forward end to the rear of the shoe by a swivel joint like M^1?

A. That would be one way of making it, and probably the most natural way.

X Q. 88. In the defendants' machine the finger beam may be turned up and folded back by the side of the inner wheel, may it not?

A. It can be turned up, but I do not think it can be folded back beyond the vertical position.

WILLIAM S. BATES.

89 *Complainants' Evidence in Rebuttal.*

Testimony taken on the part of the complainants before Frank L. Douglas, notary public, at the office of Banning & Banning, Chicago, Illinois, Saturday, March 5th, 1887.

Present: Ephraim Banning, Esq., of counsel for complainants, and J. M. Thacher, Esq., of counsel for defendants.

WILLIAM S. BATES, a witness produced, sworn, and examined on

the part of the complainants, deposes and testifies as follows in answer to questions by Mr. EPHRAIM BANNING:

Q. 1. You are the William S. Bates who has been heretofore examined as an expert on behalf of the complainants in this cause?

A. Yes.

Q. 2. State whether you have examined the various patents, models, and other exhibits offered in evidence by the defendants, and, if so, whether you understand them respectively.

A. Yes, I have; and believe I understand them.

Q. 3. Please consider and explain these exhibits in the order of their dates, and state what bearing they have on the inventions mentioned and claimed in the first and second claims of the Alvaro B. Graham patent sued on, No. 74342, and particularly whether you find such inventions contained or disclosed in any of them, giving your reasons fully for any opinions you may express.

A. None of the various patents and exhibits referred to contain the invention set forth in the Graham patent sued on and claimed in the first and second claims thereof. My reasons for this statement are as follows:

As I understand the Graham patent, the parts to which
90 my attention is particularly called are:

A gearing carriage;

A finger beam;

A vibratable link connecting the finger beam with the gearing carriage;

A swivel joint in the vibratable link;

A draft or push rod for transmitting the draft to the finger beam;

A swivel joint in the draft or push rod where it connects with the finger beam; and

An arm for controlling the rocking of the finger bar.

The object sought and attained by the invention is to permit the finger beam to have a four-way motion—that is, to permit it to rise and fall at either end, and also to rock forward or back independently of the frame or carriage.

The Wheeler patent of 1854 shows and describes a finger beam hinged to an arched bar, which bar is pivoted to the frame of the machine.

The beam can rise and fall at the outer end freely, but the inner end rises and falls only with the frame and not independently of it. There is no vibratable link in this machine; there is no draft or push rod and no swivel joints. This patent, therefore, does not contain Graham's combinations, and it does not accomplish his results, as the beam is not independent of the frame.

The Wheeler patent of 1855 is similar to his patent of 1854—that is, it shows a machine in which the finger beam is hinged to an arch that is pivoted directly to the frame, so that the beam is not independent of the frame, but rises and falls at its inner end only as the frame rises and falls. The pivoted arch is fixed by a graduating screw and nuts to a rigid arch on the frame, and the beam
91 may be dropped by stopping the machine, taking a wrench

and changing the position of these nuts on the screw. There is a draft rod in this patent, but there is no vibratable link or swivel joint on such a link and the finger beam is not independent, and therefore this Wheeler patent of 1855 does not contain Graham's combination.

The Haines patent of 1855 shows and describes a finger beam connected to the frame by two draft rods, one on each side of the machine, the beam being continued across the machine by a rigid extension. One of these draft rods is connected to the beam by a link or eye joint. The other one—the one on the left—is rigidly connected to the beam. The result of this construction is that the beam can rise and fall in a sort of a way, but cannot rock at all. To prevent motion of the beam crosswise of the machine there is a rod marked *n*, which is hooked into an eye in the beam and on the frame. There are no swivel joints in this machine, properly speaking, and the beam has none of the motions which are permitted by swivel joints in the Graham machine. The model of this Haines machine does not correctly represent what is set forth in the patent, as it shows the left-hand rod connected to the beam by eye joints instead of rigidly connected to it. The model, however, shows clearly that the beam will not rise and fall at either end independently, and it cannot even be folded for transportation.

The Ball patent of 1856 shows and describes a beam which is connected to the frame by a link hinged to the beam and to the rear of the frame, and by a drag bar rigidly bolted to the beam and connected to the forward part of the frame by a swivel joint. This swivel joint corresponds to the snipe-bill joint at the forward end of the draft rod in the Graham patent. It does not correspond
92 to Graham's swivel joint M^1, and there is no joint in the Ball machine which does correspond to it. There is no swivel joint in the link in the Ball patent, and consequently, owing to the absence of such joints, the beam cannot rock at all and does not rise and fall as freely as it otherwise would. This is clearly shown by the model. As the Ball patent lacks Graham's swivel joints and does not even secure Graham's result, it does not contain his combination.

In the Aultman & Miller patent of 1856 the finger beam is connected to the carriage by a link which is hinged to both beam and carriage by a broad hinge joint. This permits the beam to rise and fall, but effectually prevents its rocking. This is clear from the specification, which says that the beam has motion only in one vertical plane and requires no universal joint for the pitman. This machine has no draft or push rod and no swivel joints of any kind. It therefore does not contain Graham's combinations.

In the Tinker & Sprague patent of 1857 there is a finger beam connected to the carriage by two push rods and a link. The push rods are joined to the beam by link joints, one at each end of the beam, and extend backward and are hinged to a projecting timber of the frame. The link is connected to the beam and the frame by a link joint. This construction permits the beam to rise and fall at either end. It is also capable of rocking backward, but it is pre-

vented from rocking forward by stops. These stops are necessary, as without them the bar would tip forward and the fingers dig into the ground. This is clearly expressed in the following language of the specification: "In order to prevent the sickle and finger bar from tipping forward and digging into the ground we apply stops U U to the under side of the forward part of the arms Q Q,
93 which strike upon the heel of the shoe W. This allows the cutter bar to vibrate upwards from a horizontal position, but will not allow the forward edge to drop below the horizontal plane."

From this it is obvious that the Tinker & Sprague machine lacks at least one of Graham's four motions, and a very important one, namely, the one which depresses the points of the guard fingers and allows the machine to cut lodged grass, or grass which has been beaten down. The cutting of such grass is impossible with the Tinker & Sprague machine.

In the Dolph patent of 1857 the finger beam is connected to the carriage by means of a drag bar, which is rigidly fastened to the beam, and by means of a link, which is hinged to the beam and the rear of the frame. This construction permits the beam to rise and fall at either end, but does not permit it to rock. The front end of the drag bar has a limited movement in guides to permit the turning up of the fingers to a slight extent, but there is no arrangement by which they can be tipped down below the horizontal. It would, therefore, be impossible to cut lodged grass with this machine. There is no swivel joint in the link in the Dolph patent and no swivel or other joint at the connection of the drag bar with the beam. The Dolph patent, therefore, lacks two of the elements of Graham's combination, and it is incapable of at least one of Graham's four motions, namely, the forward rocking of the beam, which depresses the finger points, and another motion, namely, the backward rocking of the beam, which raises the finger points, it performs in a very imperfect manner.

In the Lufkin patent of 1857 the finger beam is connected directly to the frame of the machine, and has no vibratable link and no swivel joints. Therefore it does not contain Graham's combination.

94 In the Ball patent of 1857 the beam is connected to the carriage by a drag bar, which is rigidly secured to the beam and extends forward and is hinged to the frame, and also by a link, which is hinged to the rear of the frame and to the beam. There is no swivel joint in the link and no swivel or other joint between the drag bar and the beam, and the beam is incapable of any rocking whatever. Therefore, as the Ball machine lacks both the Graham swivel joints and lacks two of Graham's four motions, it does not contain Graham's invention.

In the Miller patent of 1858 the beam is hinged to a link, which in turn is hinged to the frame so that the beam may rise or fall. There is no swivel joint in the link and there is no draft or push rod. There is a brace extending from the link diagonally under the frame, but it is a mere brace or part of the link and not a push rod, and in any case it has no swivel joint of any kind. The whole

object of the improvement of this Miller patent is the folding of the finger bar onto the frame for transportation. The specification states that the beam is to be rigid in every other direction than the one by which it folds onto the frame. Therefore, as the Miller patent has no swivel joints, no draft or push rod, and lacks two of Graham's four motions, to wit, the rocking motions, it does not contain Graham's combinations.

In the Stetson & Maynard patent of 1859 the finger beam is connected directly to the frame by a swivel joint. It has no draft or push rod and no vibratable link, and the beam is not independent of the frame, but rises and falls at its rear end only with the frame. It therefore does not contain Graham's combinations.

In the Zug patent of 1859 the finger beam is connected with the carriage by a link hinged to the beam and to the carriage.
95 It has also a draft rod extending from the link forward to the frame. This draft rod is connected to the link by a sort of a loose shackle, which permits the beam to be raised bodily and folded over onto the frame. This connection incidentally may permit the beam to rock back, thereby raising the finger points to the extent of the looseness of the joints, but the beam cannot rock forward at all, owing to the brace arm W of the link impinging on the draft rod, as is clearly shown in Fig. 1 of the drawing and in the model. It would therefore be impossible for the Zug machine to cut lodged grass. The Zug patent therefore lacks two of Graham's important elements, namely, the swivel joints, and entirely lacks one of Graham's four motions, and, if it does not entirely lack another, possesses it to a very limited degree, one which would be of no practical value and was never intended to possess it at all. There is nothing in the Zug specification or drawing to indicate that the bar was intended to rock at all. I notice that the model in this case shows the hinge between the link and the carriage with its pivot in the direction crossways of the carriage and lengthways of the link, so that it permits the link to twist and does not permit it to vibrate up and down to raise and lower its finger beam. This is contrary to the specification and drawings of the Zug patent. The drawings show that hinge with its pivot crossways of the link cannot twist, but can vibrate up and down to raise and lower the beam, and the specification describes it as being capable of such vibrations.

In the Ball patent of 1859 the beam is connected to a drag bar, which is secured to the forward part of the carriage. The beam is so connected to the drag bar that its fingers may be raised to a slight extent and secured in a raised position. It would be necessary to stop the machine in order to make this adjustment.
96 There is no arm or other device by which it is controlled by the operator. The points of the fingers cannot be depressed below their normal horizontal position, and therefore cannot be used for cutting lodged grass. The beam is also connected to the carriage by a link with a swivel joint in it to permit the free rising and falling of the beam without binding. The Ball machine therefore does not contain a swivel joint between the drag bar and the beam. Its beam is incapable of one of Graham's four motions, and a very

important one, namely, a forward rocking to depress the finger points, and the backward rocking it possesses in a very imperfect and unsatisfactory degree. For these reasons I say that the Ball patent does not contain Graham's first combination, and for the same reasons and the further reason that there is no arm to control the backward rocking of the beam I say that it does not contain Graham's second combination.

In the Chenoweth patent of 1859 the beam is secured directly to the frame by a swivel joint to permit it to be folded for transportation. There is no vibratable link and no draft or push rod, and the beam is not independent of the frame, but rises and falls at the inner end only when the frame rises and falls. Therefore the Chenoweth 1859 patent does not contain Graham's combinations.

The Chenoweth patent of 1860 is the same as the Chenoweth 1859 patent, so far as concerns this case, and the same remarks apply to it, with the single exception that it is provided with a draft chain. It has no vibrating link, but the beam is connected directly to the frame.

In the Lomont & Grojean patent of 1860 the beam is secured by two links to an oscillating frame, the oscillation of which
97 rocks the beam forward and back. The links are hinged to the beam and to the frame. There are no swivel joints and there is no draft or push rod. Therefore the Lomont & Grojean patent does not contain the Graham combination.

In the Wheeler 1861 patent the beam is hinged directly to a movable plate, which is pivoted directly to the frame. The beam cannot rise and fall at its inner end except as the frame rises and falls; it is not independent of the frame. There is no vibratable link in this Wheeler patent and no draft or push rod. For these reasons the Wheeler 1861 patent does not contain Graham's combinations.

In the Billings patent of 1861 the beam is hinged to a rigid depending bar or bracket on the frame and it rises and falls at its inner end only as the frame rises and falls. The front of the shoe is connected to the frame by a link extending diagonally under the frame. This link is operated on by a lever to raise the finger points. The finger points cannot be depressed. There is no draft or push rod in this machine, no vibratable link, and no swivel joints. Therefore this Billings patent does not contain Graham's combination.

In the Herrington patent of 1861 the beam is rigidly fastened to a push bar, which is hinged to a frame. The push bar is also connected to the frame by a link. The beam can rise and fall, but does not rock; therefore lacks two of Graham's four motions, to wit, the rocking motions. There is no joint, either swivel or other, between the push bar and the beam. For these several reasons the Harrington patent does not contain Graham's combination.

Adjourned to Monday, March 7th, 1887, at 10 o'clock a. m.

MONDAY, *March 7th*, 1887.

Met pursuant to adjournment.

Present; Same parties as before.

98 The Bartlett patent of 1862 has a beam which is rigidly fastened to a drag bar. The front end of the drag bar, where it is connected to the frame, is movable in a guide, so as to tilt the beam and raise the finger points. So far as appears from the patent, however, it is impossible to turn the finger points down, and therefore it is impossible to cut lodged grass with this machine. The finger beam is connected to the rear of the machine by a link, which is hinged to the beam and to the frame. It does not appear whether this link has a swivel in it or not, but inasmuch as the swivel in the pitman is described, and no swivel is mentioned in the link, I assume that it has none. Therefore, as the Bartlett patent has no swivel or other joint between the drag bar and the beam, as required by Graham's claims, and also because it has no swivel in the link, it clearly does not contain Graham's combinations.

In the Stout patent of 1862 the finger beam is connected to a supplemental frame or gearing carriage by means of a rigid extension on the beam. The beam is not independent of the carriage, but rises and falls at its heel only as the carriage rises and falls. There is a draft rod hinged to the shoe, but there is no swivel joint to the draft rod. The beam is connected to the carriage by a swivel joint, so that it may be rocked, and this rocking is controlled by an arm and a set screw. To rock the beam the driver must stop the machine and get off and loosen the set screw. As this Stout patent contains no vibratable link, no swivel joint in the draft rod, and no independent beam it does not contain Graham's combinations.

In the Prentiss and Birdsall patent of 1864 the beam is connected to the frame by two links, one of which extends in the line
99 of the beam to the back part of the frame and the other extends diagonally under the frame to the front part. There are no swivel joints in either of these links. They are connected by plain hinges to both the beam and the frame. At the heel of the beam is an arm, extending forward, with a wheel at its front end. This arm is rigidly connected to the beam and effectually prevents its rocking. There is no draft rod at all, except the diagonal link already referred to.

The specification speaks of the beam rising and falling at its front edge, this motion being caused and limited by the wheel on the arm already mentioned. This rising and falling is very slight, being only such as is permitted by the looseness of the joints, and there is no rocking of the beam forward to depress the finger points. The wheel and arm do not permit such motion. Therefore it is impossible to cut lodged grass with this machine. The Prentiss & Birdsall patent therefore lacks the swivel joints of the Graham combinations, and lacks at least one of Graham's four motions, to wit, the forward rocking of the beam; and, if it does not entirely lack the backward rocking, possesses it in so very slight a degree that it is practically valueless. Therefore this patent does not contain Graham's invention.

In the Luckey patent of 1864 the beam is connected to the frame by two links hinged to the beam and to pendants on the frame and by a push rod hinged to the beam and connected to the rear of the frame by a swivel and snipe bill. There are no swivel joints in the links, there is no swivel joint between the push rod and the beam, and the beam is incapable of rocking forward to depress the finger points. Therefore this Luckey patent does not contain Graham's inventions.

100 In the Price patent of 1864 the beam is connected to the frame by a link with broad hinged joints, which effectually prevent any rocking of the beam. This machine, therefore, lacks two of Graham's four motions, to wit, the rocking motions, and lacks an important element of his combinations, to wit, the swivel joint in the vibratable link. Therefore it does not contain Graham's invention.

In the Price patent of 1867 the beam is hinged directly to the frame by means of a rigid extension piece on the beam, and the beam rises and falls at its heel only as the frame rises and falls. There is no draft or push rod on his machine, except a brace which extends from a point on the beam diagonally to a connection with the carriage. This brace has no swivel joint, and for this reason and the fact that there is no vibratable link and the beam is not independent this Price patent does not contain Graham's invention.

In the Bramer patent of 1865 the beam is apparently connected to the frame by a link having a swivel joint in it, and there is apparently a push rod running from the rear of the frame to the link at a point near its outer end and having a swivel between it and the beam, so that the beam can rise and fall at either end and rock forward and back. The patent is not entirely clear on these points; but if the beam is connected as I have stated and has all four of said motions, then said Bramer patent contains Graham's invention as defined in his first claim, but it would not contain his invention as defined in his second claim, owing to the absence in the Bramer patent of any arm for controlling the rocking. If, however, the beam of the Bramer machine is not connected as I have indicated and does not have all four of Graham's motions, then it does not contain the invention found in Graham's first claim.

101 In addition to the above exhibits, I have examined at the office of the defendants in this city an old machine marked "Hubbard machine," which I am informed is known in this case as the Bradley machine.

In this Bradley machine the beam is connected to the frame by means of a link and a push bar. The link is hinged to the beam and to the frame. It has no swivel in it, but it is made in two pieces, one of which is screw-threaded and tapped into the other for purposes of adjustment. This adjusting arrangement is not a swivel and could hardly act as such, for if loose enough to permit a swivel action it would work back and forth with the pull and thrust of the pitman and soon go to pieces. Besides this, there is no occasion for it to act as a swivel, as I shall presently explain.

The push bar is hinged to the beam. There is no swivel joint

between it and the beam. The push bar is connected to the frame by a universal joint corresponding to Graham's snipe-bill joint at the front end of his draft rod. The push rod is hinged to the beam at a point forward of its back edge, so that the back edge of the beam forms a stop to prevent the finger points being depressed below their normal level, and it is consequently impossible to cut lodged grass with this machine. Projecting upward from the rear edge of the beam by the side of the push rod is a lug with a slot in it through which a bolt extends into the push bar. This prevents the finger points rising beyond a certain limit and serves to set them in a given position to suit the character of the ground according as it is rough or smooth. The finger points are capable of rising one and five-eighths (1⅝) inches. Thus we see that this Bradley machine has no swivel joints either in the link or between the push
102 bar and the beam; that the beam is incapable of rocking forward, and therefore lacks one of the most important of Graham's four motions. For these reasons it obviously does not contain Graham's invention. Besides the above, there is no arm to control the rocking of the beam, supposing it to have any.

I am informed by counsel that Graham made his invention prior to the date of the Bramer patent. This being the case, I am convinced, from a careful study of all the other patents and exhibits, that Graham was the first to ever provide for the rocking forward and backward and the raising and lowering of a finger bar of a harvester, independently of the frame and without the use of a supplemental frame. Graham's four motions—viz., raising the finger beam at either end, lowering the finger beam at either end, rocking the beam forward so as to depress the finger points, and rocking the beam backward so as to elevate the finger points—do not seem to have ever been all accomplished in any one machine prior to the date of his patent, and certainly were not so accomplished independently of the frame. It is no doubt true that some of these movements considered separately had been previously accomplished, but I cannot find them all provided for in any one machine, nor can I find Graham's full mechanical combinations to have existed in any one machine before, nor can I find any machine in which an independent finger beam can be rocked forward so as to depress the finger points to cut lodged grass.

Therefore I consider Graham's position in the art to be a highly meritorious one, he having been the first to bring into existence a machine whose beam had a four-way motion independently of the frame or gearing carriage.

Q. 4. State whether you consider, inview of these various patents and exhibits, that the "New Warrior mower" manufactured
103 by the Plano Manufacturing Company, defendant, of which a sample machine is offered as an exhibit in this cause, contains and embodies the Graham inventions mentioned and claimed in the first and second claims of the patent sued on, No. 74342. In other words, state what bearing, if any, these various patents and exhibits have on the question of infringement in this cause.

A. Unquestionably the "New Warrior mower" does contain and

embody the Graham inventions. It has an independent finger beam with a four-way motion, which beam is connected with the gearing carriage by a vibratable link and a push rod and two swivel joints, or their full mechanical equivalents corresponding to Graham's swivel joints. The only bearing that the various patents and exhibits have on the question of infringement is to form a background and set out the fact in a strong, clear light.

Adjourned to March 8, 1887, at 10 o'clock a. m.

MARCH 8, 1887—10 o'clock a. m.

Parties met pursuant to adjournment.

Present: As before.

Cross-examination by Mr. THACHER:

X Q. 5. In the Wheeler patent of 1854 the finger beam is connected to the main frame by a kind of swiveling joint, is it not; or, in other words, what I believe in your former deposition you called a two-way joint?

A. Yes, sir.

X Q. 6. In this patent is not the tongue what is known as a loose or hinged tongue, so that the frame is left free to vibrate to permit the cutting apparatus to follow the ground?

A. Yes, sir.

X Q. 7. And the cutting apparatus is drawn or dragged forward by its attachment to this main frame?

A. Yes, sir.

104 X Q. 8. Is the finger beam capable of being rocked so as to raise and lower the front ends of the fingers?

A. It is.

X Q. 9. There is a lever for accomplishing this rocking in both directions, is there not?

A. There is.

X Q. 10. And there are means for fastening this lever in its adjusted position, so as to hold the guard fingers into the position in which they may be worked by the rocking of the finger beam?

A. Apparently there are such means.

X Q. 11. In this patent, in the operation of the machine, may not the finger beam rise and fall at each end in following the ground, while it may also be rocked bodily to adjust the points of the fingers, and may also be turned up towards the frame on the hinge at its inner end?

A. Yes; it has all these motions in connection with the frame.

X Q. 12. In the Wheeler patent of 1855 is not the connection of the finger beam to the main frame by a two-way joint substantially the same as in his 1854 patent?

A. It is.

X Q. 13. You say you find a draft rod in this 1855 patent. Is this draft rod attached to the inner end of the finger beam?

A. It is, indirectly. It is attached to a standard on the beam.

X Q. 14. By what kind of a joint is this draft rod connected to the finger beam?

A. The joint is not described in the specification, but it apparently consists of a long threaded bolt tapped into a projection on the standard and secured by a joint nut.

X Q. 15. Is there a joint in the draft rod a little way in front of the finger beam? If so, what kind of a joint is it?

A. There is. The rod is jointed to the bolt by an eye or snipe-bill joint.

X Q. 16. What do you understand is the object of this
105 joint?

A. There is no particular object mentioned. The joint, however, permits the various motions of the finger beam.

X Q. 17. A hook-and-eye joint like the one in this patent is in some sense a swiveling joint, is it not?

A. It is the equivalent of a swivel joint.

X Q. 18. Do you not understand from the description in the Haines patent of 1855 that the draft rod on each side of the machine is connected at its rear end by a hook-and-eye joint—the one to the finger beam and the other to an extension thereof?

A. They are not so shown in the drawing. The drawing apparently shows the one on the left as screwed right into the extension of the finger beam, so as to prevent any twisting of the beam. There is language in the specification which might indicate that this left-hand rod was connected to the beam by a hook and eye if the drawing were less clear. Besides this, there is no means to prevent the beam twisting, as it would if there were a hook-and-eye joint on each rod, and this fact bears out the construction shown in the drawing.

X Q. 19. I find this language is found in the second column of the first page of the Haines printed specification: "The cutter bar H I, thus made, is hung to the main frame by two rods, K K, hooked into dead-eyes L in the front cross-piece, B, and extending back to the rear of the frame, where they are similarly hooked to the cutter bar." Does not this language make it clear that both rods have an eye joint at their rear ends?

A. Apparently it does. That is the language I referred to in my last preceding answer.

X Q. 20. The Ball patent of 1856 is a clear type of what is known as the drag-bar machine, is it not?

A. Yes, sir.

106 X Q. 21. Do you understand that the machine in the Graham patent is of the same type?

A. It is in some respects similar. It might be said to be of the same type.

X Q. 22. This machine is more fully and completely illustrated in the Ball patent of 1857, is it not?

A. Yes, sir.

X Q. 23. Will you explain what motions you understand the finger beam is capable of in the machine shown in these Ball pat-

ents of 1856 and 1857, and by what devices such motions are obtained?

A. The beam is capable of a rising and falling motion only. This motion is permitted by a hinge at the heel of the beam connecting it to a link, a hinge at the end of the link connecting it to the rear of the frame, and a hinge and swivel at the front end of the drag bar connecting it to the frame.

X Q. 24. Is the finger beam capable of rising and falling at each end independently of the other?

A. It is.

X Q. 25. And it may be turned up against the main frame, may it not?

A. Yes, sir.

X Q. 26. Now, in raising or lowering the inner end of the finger beam while the outer end remains at the same level, or *vice versa*, is there not some change in the relation of the joints by which this beam is connected to the main frame?

A. There is a tendency of the joints to bind, owing to the motions being in the arcs of circles.

X Q. 27. Would not this necessitate loose joints in a machine for practical operation?

A. It would unless there was a swivel in the link and a hinge between the drag bar and the beam, as in the Graham machine.

X Q. 28. Do you know whether or not machines like the
107 Ball 1856 and 1857 patents were built and used to a very considerable extent?

A. I do not know.

X Q. 29. Take the Ball patent of 1859. How do the connections of the finger beam to the main frame differ from those in the Ball 1856 and 1857 patents?

A. They do not differ except in the provision of a swivel to the link at its connection with the frame in the 1859 patent.

X Q. 30. You mean by the link the bar or rod which connects the inner end of the finger beam to the rear end of the main frame, do you?

A. Yes, sir.

X Q. 31. In this 1859 Ball patent there is provision for the rocking of the finger beam also, is there not?

A. There is provision for adjusting it in an axial direction to vary the height of the finger points. This might be called rocking, though the term rocking means a little more than a mere once-for-all adjustment or infrequent adjustment.

X Q. 32. Now, in the Ball 1859 patent, in a machine for practical operation, the joint between the link or connecting bar and the shoe or finger beam would have to be loose to permit the required movements of the finger beam, notwithstanding the swivel joint between this link and the main frame, would it not?

A. Yes, sir; either that or a hinge in the drag bar where it joins the shoe.

X Q. 33. As this patent shows no hinge in the drag bar, an operative machine would require the loose joint mentioned, would it not?

A. Yes, sir.

X Q. 34. In the Aultman & Miller patent of 1856 the finger beam is connected to the main frame by a link or arm hinged at one end to the main frame and at the other end to the finger beam, is it not?

A. Yes, sir.

108 X Q. 35. Do you understand in this patent the tongue and main frame are stiff?

A. Apparently they are.

X Q. 36. The finger beam will rise and fall at either end independently of the main frame, will it?

A. Yes, sir.

X Q. 37. In this respect this type of machine is like the drag-bar type shown in the Ball patents, is it not, though the devices by which the movement is obtained are different somewhat?

A. Yes, sir.

X Q. 38. In Tinker & Sprague of 1857 you say the "link is connected to the beam and the frame by a link joint." Do you mean by the rod or bar which connects the inner end of the finger beam to the front of the main frame?

A. Yes, sir.

X Q. 39. It is lettered T in the drawings, is it not?

A. Yes, sir.

X Q. 40. This bar is at one end jointed directly to the finger beam, is it not?

A. Yes, sir.

X Q. 41. What kind of a joint makes this connection?

A. The drawing does not show it clearly. The specification calls it a link joint, which I suppose is like two links of a chain.

X Q. 42. The joint of this rod to the main frame is also of the same kind?

A. Yes, sir.

X Q. 43. I suppose the bars or arms Q Q in this Tinker & Sprague patent may be called thrust bars, may they not?

A. Yes, sir.

X Q. 44. If I understand your explanation of this patent you find that this Tinker & Sprague machine will permit all the motions of the finger beam as it moves over the ground which are found in the Graham patent machine, except that the fingers are stopped at a certain point in rocking downward. That is the case in these two machines, is it not?

109 A. The Tinker & Sprague fingers do not rock downward at all, except when they have been previously raised—that is, they do not rock below their normal horizontal position. With this explanation I should answer yes to the question.

X Q. 45. Suppose the stops U U, which prevent the finger beam in Tinker & Sprague from rocking downward below a certain point, were removed and a hand lever was attached to the finger beam, say, for instance, such a device as shown in the Wheeler patent of 1854, what would you have then?

A. You would have a better machine than Tinker & Sprague ever dreamed of.

X Q. 46. How would the motions of the finger beam thus compare with the Graham machine?

A. It would have all the motions of the Graham machine.

X Q. 47. Does not the finger beam in the Dolph patent of 1857 have a movement which is practically rocking, though the whole drag bar vibrates with it?

A. It rocks backward so as to elevate the finger points. It does not depress them.

X Q. 48. The possibility of depressing the points of the fingers below a level position depends upon the length of the curved guides for the front end of the drag bar, does it not?

A. It would depend partly on that—that is, on their downward extension. It would also depend on the lever which actuates the front end of the drag bar. As shown in the drawings, this lever does not permit the forward rocking of the finger beam.

X Q. 49. The lever device to which you have referred is constructed so that it may be secured at any point of adjustment, and thereby hold the fingers in the position to which they may be adjusted by the lever in this Dolph patent, is it not?

A. To the extent of their capacity for motion it is.

110 X Q. 50. In the ordinary movements of the finger beam in this Dolph patent there would be that binding at the joints which you found in the Ball machines, would there not?

A. Yes, sir.

X Q. 51. Do you notice that provision is made for this by making the joints of the connecting link or arm loose, as seen in figure 2 of the Dolph drawings?

A. Yes, sir.

X Q. 52. In the Stetson & Maynard patent of 1859 the drooping frame to which the finger beam is swiveled is free to rise and fall at its lower end, is it not?

A. Yes, sir.

X Q. 53. The finger beam being swiveled to this end of the said frame is free to rise and fall at the inner end with the frame, as I understand it. Do you find it so?

A. Yes, sir.

X Q. 54. Is not this drooping frame the equivalent of the drag bar in the Ball type of machine?

A. It renders a drag bar unnecessary, just as the drooping frame of the Wheeler patent does.

X Q. 55. Is not this frame the device which drags the finger bar along?

A. Yes, sir.

X Q. 56. In this Stetson & Maynard patent, the finger beam being swiveled to the drooping frame, is the beam capable of rocking so as to raise and lower the points of the fingers?

A. It is.

X Q. 57. Can the fingers drop below a level position as well as raise above it in this case?

A. Apparently they can.

X Q. 58. Is there any movement of the finger beam in the Gra-

ham patent which is not obtained in this Stetson & Maynard machine?

A. Not that I think of. The Stetson & Maynard beam has the four-way movement, though it secures it by different means.

X Q. 59. Is there also a lever in Stetson & Maynard by
111 which the finger beam is rocked?

A. Figure 9 of the drawing shows part of a device which is stated to be such a lever, but the whole of it is not shown.

X Q. 60. In the Chenoweth patent of 1860 is not the inner end of the finger beam connected to the drooping frame by a swivel joint which permits the finger beam to be rocked and also to vibrate lengthwise vertically?

A. Yes, sir.

X Q. 61. Do you find in this patent also a device answering to a drag bar?

A. There are two or three braces, one of which, marked P, bears some similarity to a drag bar.

X Q. 62. How is this device P connected to the forward end of the shoe?

A. It is a chain, and appears to be connected to the shoe by an ordinary chain shackle.

X Q. 63. Does this device permit the finger beam and the shoe to be rocked?

A. Yes, sir.

X Q. 64. And it also permits the movement of these parts about an axis at right angles to the rocking axis, does it not?

A. Yes; about the axis of the hinge H I.

X Q. 65. Is not the link joint by which the draft chain is connected to the shoe in this Chenoweth patent the equivalent, then, of a swivel joint in the same location?

A. Yes, sir; it is.

X Q. 66. The Wheeler 1861 patent I understand to show a development of his 1854 and 1855 patents, the machine being of the same general type. In this later patent do you find the finger beam connected to the drooping frame by a swiveling joint?

A. Yes, sir.

X Q. 67. And there is a lever attached to one part of the connection by which the finger beam may be rocked and also fastened in any position of adjustment, is there not?

A. Yes, sir.

112 X Q. 68. In the Herrington 1861 patent do you not find that the link or bar which connects the push bar to the main frame is attached to these parts by eye-joints?

A. Yes, sir.

X Q. 69. What kind of a joint is that at the rear end of the push bar where it is connected to the main frame?

A. I should judge it was also an eye-joint, but it is not clearly shown or described.

X Q. 70. You say that in the Bartlett 1862 patent you do not find a swivel joint at the inner end of the link or bar which connects

the finger beam to the main frame. How, then, can the drag bar be raised and lowered to tilt the fingers?

A. It is not apparent just how the link in the Bartlett patent is connected to the frame. The specification states that the end of the link is fast in a wrist that turns in the lower end of a stamp. It may or may not have a swivel at that point. If there is no swivel the vibration of the drag bar would depend on the looseness of the joint between the link and the beam. The drawings seem to show sufficient looseness for that purpose.

X Q. 71. Have you examined the certified duplicate of the Bartlett model which is in evidence; if so, what does this model show as to the construction of the joint in question?

A. It shows sufficient looseness of the joint between the link and the beam to prevent the vibration of the drag bar. It shows the link secured to the wrist by being stuck through it and having a nut screwed onto its end, the link being reduced in size where it goes through the wrist. If the nut be loose this would be an accidental swivel; if the nut be tight it will not be a swivel. In practice the nut would have to be tight to resist the pull and thrust of the pitman.

X Q. 72. In the Stout 1862 patent there is a genuine drag bar, is there not?

A. Yes, sir.

113 X Q. 73. And this drag bar differs from those in the Ball patents in having a hinged joint at its rear end where it is connected to the shoe, does it not?

A. It does.

X Q. 74. What do you understand is the object of that hinged joint in the Stout patent?

A. It permits the twisting or rocking of the beam or its adjustment on its longitudinal axis.

X Q. 75. Does this joint permit a flexure at this point so that the finger beam is tilted without vibrating the draft bar at its forward end?

A. Yes, sir.

X Q. 76. This is the purpose also of the joint in the draft bar in front of the shoe in the Graham patent, is it not?

A. That is one purpose.

X Q. 77. Looking at the drawings of the Stout patent, especially figure 2, what kind of a joint do you think is intended to be shown at a^1, where the drag bar and shoe are connected together; a loose joint or a tight one?

A. It appears to be loose.

Redirect examination by Mr. BANNING:

R. D. Q. 78. In answer to cross-question 58 you say that the finger bar of the Stetson & Maynard patent is capable of having the four-way motions of the Graham finger bar—that is, of rocking or tipping the points of the guards up and down and of rising and falling independently at either end. Please state whether it is capable of

having these motions independent of the frame and without the intervention of an under or supplemental frame.

A. It has not. It is connected directly to a supplementary frame, and rises and falls at its inner end only when the frame rises and falls.

R. D. Q. 79. Do you find Graham's four-way motions independent of the frame or without the use of a supplemental frame
114 provided for in any patent here offered in evidence issued, say, prior or during the year 1863?

A. I do not.

R. D. Q. 80. Aside from the motions which they permit or produce, do you find Graham's mechanical combinations recited in his two claims in suit shown or disclosed in any such patent—that is, in any patent issued prior to or during the year 1863?

A. I do not.

Adjourned to Wednesday, March 9, 1887, 10 o'clock a. m.

WEDNESDAY, *March* 9, 1887—10 o'clock a. m.

Parties met same as before, pursuant to adjournment.

Recross-examination by Mr. THACHER:

X Q. 81. Do you find in the Graham patent the four-way motions of the finger beam which you have specified obtained independently of the device or devices by which the finger beam is dragged forward and braced or held in working position?

A. The beam has the four motions, and they are permitted by the devices, or rather by the combinations of devices, which keep the beam in position. Of course, the motions are dependent on the devices.

X Q. 82. What are the parts in the Graham patent which hold the finger bar in its position and draw it forward?

A. The link, the draft rod, and the joints.

X Q. 83. Now, does the Graham finger beam have any vertical movement at its inner end except as it rises and falls with the drag bar and link or connecting bar to which it is attached?

A. No; those parts move with it, of course.

X Q. 84. In the Stetson & Maynard patent the inner end of the finger beam also moves with the vertical vibration of the supplemental frame, does it not?

A. Yes, sir.

115 X Q. 85. The same is true also of the Chenoweth 1860 patent, is it not?

A. Yes, sir.

X Q. 86. In this Chenoweth patent what is it that holds the finger beam in position and draws it forward?

A. It is a frame marked A in the drawings, assisted by braces marked J, which are further strengthened by two chains, Q and P.

X Q. 87. In the Stetson & Maynard patent what holds the finger beam and draws it forward?

A. The drooping frame.

X Q. 88. Do not these parts which perform this function of holding the finger beam in place and drawing it forward in both of these patents vibrate vertically about the center?

A. Yes, sir.

X Q. 89. The same is true of the parts which you have mentioned which perform this same function in the Graham patent, is it not?

A. They vibrate vertically about their centers.

X Q. 90. In these drag-bar machines as shown in the old patents, which are in evidence, could the drag bar be taken from one of these machines and put in that shown in another patent?

A. As a general thing, they could. Of course, it would be necessary to make some changes sometimes.

X Q. 91. Let me call your attention particularly to the two patents of Ball, 1859, and Stout, 1862. I will ask you if, in your opinion, there would be any difficulty in applying the draft bar hinged to the shoe of the Stout patent to the machine shown in the Ball patent, or, in other words, exchanging the draft bar of Ball for that of Stout?

A. It would be necessary to make considerable changes in the Ball devices, but I suppose an ingenious mechanic by the exercise of a little invention could make the change, supposing always that he first conceived the idea of doing it at all.

116 X Q. 92. Won't you explain what difficulties are in the way of this substitution suggested in the last question?

A. It is a little difficult to do that without having the whole machine before me. As the Ball machine is constructed the finger beam is supported directly on the drag bar, being fastened to a swinging plate which is hinged at the back end of the drag bar. All this structure would have to be changed. That there were serious difficulties in the way of the changes you have suggested is shown by the fact that Ball and some others have tried to give the finger bar a free twisting motion independent of the drag bar, and none of them seem to have hit upon the method that you suggest.

X Q. 93. As a matter of fact, Mr. Bates, isn't it true that, as a mechanical expert, you can't see any real obstacle to the substitution of the Stout draft bar in the Ball machine?

A. With my present knowledge of mechanics I presume I would not have much trouble in changing the mechanisms so as to adapt the Stout draft bar to the Ball machine; but neither would I have any difficulty in setting up a telephone so that two persons ten miles apart could talk to each other, though that was considered impossible some years ago.

X Q. 94. Suppose the Stout draft bar substituted, as suggested, in the Ball machine, what kind of a machine would you have as to the movements of the finger beam possible to be obtained?

A. So far as I can conceive the effects of the change, you would have a much better machine than either the Ball or the Stout, for the simple reason that the rising and falling of the finger beam would be possible without binding the joints, and it would also be

possible to rock the beam somewhat, and these motions would not be dependent on the motion of the frame.

117 X Q. 95. Let me ask you if the finger beam would not then have all the movements which you have described as four-way motions in speaking of other machines?

A. If I correctly understand the supposed structure, it would; but it must be remembered that in imagining this change I am familiar with the Graham, the defendants', and other comparatively modern machines which have these four motions, and naturally do not see the innumerable difficulties and experiments of a mechanic who was not familiar with the modern machines.

X Q. 96. Could you readily substitute the draft-chain device, shown in the Chenoweth (1860) patent, for the draft bar in the Ball machine?

A. I believe that I could.

X Q. 97. Would the Ball finger beam then be capable of the four-way motion about which you have talked?

A. Yes, sir.

X Q. 98. The state of the art, as shown by patents in evidence earlier than 1862, exhibits several instances in which the shoe or inner end of the finger beam is hinged to an arm or link by which it is connected to a frame of the machine, does it not?

A. Yes, sir.

X Q. 99. I will ask you, then, if, in your opinion, it would require any invention to put such a hinge connection between the shoe and the extension bar marked R in the Stout patent?

A. It might or might not, according to the amount of change necessary in putting in such a hinged connection.

X Q. 100. Well, what change would be necessary to put in such a plain hinge joint as that shown in the Ball patents of 1856 and 1857 or that shown in L. Miller, of 1858?

A. It would be necessary, in the first place, to conceive the
118 idea of making such substitution; to conceive that it would be possible to make it and still have an operative machine, and it would then be necessary to conceive all the details of the change, and possibly to experiment considerably. It would be necessary to put the gearing in the main frame and dispense with the supplemental frame, and then provide devices which would form the hinge of the connecting bar, and it might be necessary to rearrange the gearing on account of the presence of such hinged connections. In fact, the changes would be so numerous that it is impossible to specify them without taking working drawings of the machine to be changed and carefully studying out the proposed modification and how it could be accomplished if at all.

X Q. 101. Look at the drawing of the Stout patent. Is there any mechanical obstacle whatever to cutting the bar R in two just inside of the shoe and hinging the two parts together by a plain horizontal hinge?

A. Not that I know of.

X Q. 102. Now, what earthly change would that require in the gearing and the supplementary frame, in view of the fact that, as

shown in the drawings and described in the specifications, the finger bar, with its extension, already has both a rocking movement and a vertical vibration about the pivot A as a center?

A. That would require no change, so far as is apparent from the patent.

X Q. 103. A similiar change could be readily made in the Chenoweth 1860 patent by cutting the bar K in two just inside of the shoe, could it not?

A. Yes, sir.

X Q. 104. In this Chenoweth patent, last named, this piece K is separate from the shoe and finger beam, and appears to be bolted to the former. Now, could not this arm K be connected to the
119 shoe by a hinge joint, just as the similar arm E is shown connected to the shoe in the earlier patent of Ball, 1856?

A. I should think it could.

Redirect examination by Mr. BANNING:

R. D. Q. 105. What do you mean by saying in your answer to cross-questions 88 and 89 that the parts therein referred to "vibrate vertically about the center? What "centers" do you refer to in each of those answers?

A. I meant that the drooping frame, or supplemental frame, vibrated vertically about its hinge, wherever that was, and that the drag bars and the links vibrated vertically about the points at which they were hinged to the frame—the centers referred to in the questions and answers 88 and 89, and the hinges which connect the parts referred to to the frame. These centers are at different points, of course.

R. D. Q. 106. Do you consider that the modifications suggested in cross-questions 91 to 104, as, for instance, the substitution for the Ball drag bar of the Stout draft bar or the Chenoweth chain device, to be of such a character as to have been readily apparent to mechanics skilled in the art, say in 1863, or would you consider that experiment was necessary at that time to determine the practicability of such changes, assuming, for the sake of the question, that a machine so constructed would contain the Graham inventions in controversy?

A. I should say decidedly that experiment would be necessary, and especially so, as, judging from the prior patents, the mechanic would probably have the idea firmly fixed in his mind that the forward rocking of the finger beam to depress the finger points would be entirely impracticable and would destroy the value of the machine. This would be all the more probable in view of
120 the fact that the points of the guards do not seem to have ever been tipped downward before to enable the machine to cut lodged or fallen grass, except in connection with strong, cumbersome, and expensive machinery.

As I have already said, the only machines in which this downward tipping was accomplished at all before Graham's invention were those in which the finger beam is attached directly and solidly to the main frame or to a strong, heavy supplemental frame, so that,

patent sued on in this suit. I am quite positive that I made that model in December,-1862, but I wouldn't want to say absolutely. It might have been after the holidays in that winter.

On the basis of that model I made an arrangement with a firm of carpenters and builders, who owned and run a planing mill with some considerable wood-working machinery, by the name of Porter Brothers, of Waukegan, Illinois. I made this arrangement in January, 1863. The arrangement was to experiment on and perfect, if possible, and afterwards to manufacture a machine after the manner of the model spoken of. We made three machines, I think,
124 that year, the first one of which, before it was entirely completed beyond the finger bar and the attachments to the main frame, a vibratable link, draft rod, and finger bar, I and a man who was at work with me, a mechanic by the name of Trumbull Kent, took in its unfinished state out into a field known locally as "Gordon's slough," to determine as to how the finger bar was going to conform to the inequalities of a rough surface in the meadow, and see if we had our finger bar and balances properly arranged. This trial of my experiment was had in the latter part of March or very early in April of 1863. We developed the fact by that trial that our finger bar did not adjust itself properly.

We took the machine back to the shops and made such changes in the parts as in our best judgment would accomplish the object, and we then proceeded to finish up three machines. We had a wooden finger bar in the machine spoken of, and in making the changes we put in a corrugated iron finger bar in the three machines which we were at work on, and some time in June following we took the first machine which we had completed with the cutting apparatus, and I think there was one coat of paint on the machine, out into Avon, Lake county, Illinois, onto the farm which I had formerly owned. On that farm there was one piece of meadow which had a smooth bottom and another meadow which was quite rough, and I considered it an excellent place to test the cutting capacity of the mower in the smooth ground and the rough ground a splendid place to test the capacity of the finger bar for adjusting itself to the inequalities of the surface while at the same time cutting the grass during such self-adjustment. The machine worked very nicely for a time on the smooth ground—cut to our entire satisfaction.

125 We then took it onto the rough ground, and the first considerable bog that we came in contact with the guards ran into it rather than riding over it automatically, as we desired it to do. We were driving a good fair walk with a good strong team. The outer end of the finger bar came in contact with the bog mentioned and twisted our finger bar. Its inclination was to run into the ground on meeting elevations of the surface rather than to scale them or ride over them without manipulation by the operator. We returned to the shop, leaving this machine in the field for the time being. We went to work directly and changed the line of draft on the finger bar, and took out the corrugated iron finger bars and replaced them with wooden ones in the two machines that were not

then completed. These two machines soon after this were taken—one by a farmer by the name of Ichabod Bull, the other one by a farmer by the name of Richard Dooley—and they were tried on their farms, respectively.

With the machine on Mr. Bull's farm we made very little progress indeed, hardly worth mentioning. Mr. Bull, being in a great hurry with his work, abandoned us within a day or two and went to Waukegan and bought a Standard machine. Mr. Dooley was more patient with us, and through his kindness and patience we were enabled to experiment through his entire harvest of both grass and grain for the harvest season of 1863. The machine resulted in a failure, yet I still had faith that a machine of that design could be perfected, and I believed that if perfected it would discount in its operations any machine of a like kind then in existence.

In fact, I was so much encouraged, notwithstanding the great discouragements that we had encountered during these experi-
126 ments, that I proceeded that fall of 1863 to get up a model for an application for a patent. This model I made in November of that year, and as early as December 1st, at the latest, of that year I forwarded that model to Munn & Co., of 37 Park Row, New York city, together with the first Government fee and a letter conveying to them, in the best manner that I could, my own ideas of my invention and what I desired to secure by letters patent. Some time toward the last of February I received the application papers for my oath and execution. These papers I executed and returned to them, if my memory serves me, on the same day of their receipt by me, together with their fee, which they notified me was then due. Within a few days I received a letter from those parties acknowledging the receipt of the money and papers. That was the last that I heard from that application for some months, and, being exceedingly desirous of securing my patent at as early a day as possible, I became uneasy and wrote Munn & Co. inquiring what progress was being made in my case, and they answered that my application was progressing in the usual way, and as soon as reached by the Patent Office it would be acted upon. I wrote them two or three other letters on the same subject at later dates, and in their last answer they informed me that the Patent Office was like a country grist-mill—first come first served—and it was without their power to advance my case in any manner.

During all of this time I was exceedingly anxious to obtain my patent, because I considered it my capital, and I had at that time a contract with a party by the name of George Cleveland in which he was to invest a certain amount of money in the enterprise, provided I got my patent out within one year, as well as the fact that all parties that I had sought to join me in the undertaking
127 of perfecting the machine had raised the question of the possibility of my being able to obtain a patent on my invention. The reason of the arrangement with Mr. Cleveland was that Porter Brothers had given it up as a bad job in the fall of 1863, and this contract with Cleveland, if my memory serves me, was dated the fourth of February, 1864.

The next thing that I heard from Munn & Co. was some time in the summer of 1866—I can't give the month—when I received a notice from them that the Patent Office had allowed a part of my claims and rejected a part of them, the rejected part constituting about all there was in my application that I cared for or esteemed valuable. They sent me the references and advised me that they considered them good, and further advised me to accept the patent as allowed. They also informed me that I could appeal from this finding, if I desired so to do, and informed me that they would conduct the appeal for me for a certain fee, which was their usual and regular fee for that service. I was unable to see my invention in the references that they sent me. I wrote them asking them to return to me the original papers, which they did or professed to do. Those papers, when received by me, were marked in the margins in red—I don't know whether in ink or pencil marks—clerical errors. These words or marks were mainly crossed, and I finally found enough out to make out that that was the language used on those papers.

Upon this state of facts I determined at once to change solicitors, and the fall following, I think in September, I sent by a gentleman by the name of William B. Werden, who was at that time interested with me in my enterprise, and who was also a merchant carrying on a general store at Waukegan, Illinois, and who was going
128 to New York city, as was his usual custom, to buy his fall and winter stock of goods, to secure for me a patent solicitor who had some capacity and integrity. In accordance with my direction he made the acquaintance of Mr. E. S. Renwick. Mr. Werden laid the application papers which I had received back from Munn & Co., also the references, and I think their letter, before Mr. Renwick, who gave it as his opinion that I was entitled to what I had asked for.

I had instructed Mr. Werden to make an arrangement with a solicitor, when found, to take up my case on appeal, and during his talk with Mr. Renwick he (Mr. Werden) informed Mr. Renwick that I had some further improvements that I would soon make a new application for. Upon this Mr. Renwick informed him that my cheaper and more expeditious course would be to file my new application containing the subject-matter which had been rejected and claim it in the new application, in connection with the improvements, and withdraw the rejected portion of the first application. I acted upon this advice and proceeded to get up a model containing the rejected matter or portion of my first application and embracing my new improvements, and, in the fall of 1866, when this model was completed I forwarded this model to Mr. Renwick, at New York city, together with such funds as he required at that time, and in the winter—I should say January, 1867—Mr. Renwick forwarded to me for my execution prepared application papers, which I executed and returned to him, and on the 11th day of February, 1867, as I remember, this second application was filed in the Patent Office.

Adjourned until April 26th, at 2 o'clock p. m.

APRIL 26, 1887.

Parties met pursuant to adjournment.

Present: Same as before.

129 Mr. GRAHAM, resuming his answer, said:

On February 11, 1868, the patent on this last application was issued. In the meantime, on July 23, 1867, the patent on the first application was issued to myself and W. B. and C. A. Werden. Under the Cleveland arrangement we undertook in 1864 to build, I think, 15 machines and completed, I think, some ten or twelve of them. The first one of these machines that we tried or tested we tried on the farm of George Stearns, in the town of Warren, Lake county, Illinois. This machine proved a signal failure, and that was the extent of my personal experimenting that season, for the reason that Mr. Cleveland had taken the mechanical charge and responsibility of the work into his own hands, and through his dictation this failure I esteemed largely due, and, becoming disgusted with him, I discontinued any further efforts with him. I will state here that Mr. Cleveland was a very young man—I should say somewhere from twenty-one to twenty-two years of age—and entirely destitute of any mechanical knowledge or experience at the time that he undertook this enterprise with me.

In the fall of 1864 or early in the following winter I made a second arrangement with Porter Brothers to reconstruct our old experimental wrecks of 1863 and to endeavor to perfect them, so that there might be something got out of them; and, in accordance with this arrangement, I reconstructed four, that I can now remember, of those and succeeded in making them a success, and these four machines are the first machines that were ever actually sold.

I wish to state that the reason I am able to state these early dates so nearly and positively is that my youngest child was born on the 19th of June, 1862, and I made the first model spoken of in December following, as I have before stated.

130 The reason that I so distinctly remember the dates of the making of my first Patent Office model in November, 1863, is that I made a loan from my uncle, David Graham, of two hundred dollars for the express purpose of paying the expenses of procuring a patent on that model. The note which I gave him for that money was dated November 13, 1863.

Q. 5. Have you any of the correspondence relating to your patent or proceedings in the Patent Office? If not, state whether you have searched among your papers and effects for them.

A. I have not any of that correspondence either with Munn & Co. or E. S. Renwick, as I considered said correspondence valueless after having procured my patents and took no especial pains to preserve them, and in later years I have moved about considerably and they have become lost or destroyed. Some eight or nine years ago I made a very diligent search for them, presuming when I began the search that I should be able to find them or a portion of them, but I was entirely unable to do so. The correspondence with E. S. Renwick was conducted by W. B. Werden, and if there is any of

that correspondence in existence it is in the possession of W. B. Werden or his brother, C. A. Werden; and, not being on friendly terms with those gentlemen, I have been entirely unable to secure such correspondence and other papers belonging to me that were in their safe at the time of our dissolution; and as early as the fall of 1871 I took out a writ of replevin before a justice of the peace of Lake county, Illinois, and placed the writ in the hands of an officer by the name of Silas King to possess myself of those papers and correspondence. Mr. King's report on his return and also to me was that he was assailed by three men when he made his errand or business known, and thrust from the safe, and held by two
131 men while the third took those letters from the safe and placed them beyond his reach.

Q. 6. State fully how your machines were experimented with or used in 1863 and 1864, and state also whether they were successful; and, if not, what was the matter with them in each of those years?

A. The machine of 1863, as I have stated in a former answer, I experimented with during the entire harvest season on Mr. Dooley's farm. The difficulties that I encountered were mainly with the swivel joint designated as M in the patent of February 11, 1868. I had great difficulty in constructing with my meagre experience and facilities such a joint as would resist the thrust of the pitman and sickle and overcome the counter-vibration of the gearing carriage to the pitman and sickle. My first difficulty, I will say, occurred with supposing this castor to be properly proportioned to the wheel. I was at a great loss to determine the cause of its unsatisfactory operation, and after a large number of break-downs with that I concluded that the castor hadn't leverage enough to cast the wheel. I then took that pattern and extended its lower end sufficiently to give the wheel the required leverage over the castor. That ended the difficulty with that feature.

The swivel joint M of that year, 1863, was constructed differently from the joint of February 11, 1868, in this—that I used a stud, inserted it through the wood-work in the rear left-hand corner of the main frame, and when the machine run its tendency was to ream out the wood and give lost motion, which allowed the main frame to vibrate counter to the pitman and sickle, and I bushed that hole with sheet iron first, and that didn't seem to answer the purpose, and I finally one day, for the want of sheet iron in the field, bushed
132 it with leather taken from an old boot leg; that seemed to keep its place for a time, but still failed to overcome the difficulty fully, and I inserted more of that bushing, from time to time, until I finally got it so confined that it practically overcame the vibration, and then when so confined the stud commenced breaking.

I don't know that I could state all of the efforts and lesser difficulties that I experienced in that machine, but I do know that I followed it and prosecuted my castor wheel and the lever which it supported and, through the lever, the rear portion of the gearing carriage. That year—1863—and 1864 I used a pivoted tongue in my machine and carried the balance of weight on this castor wheel. That castor wheel, in turning a corner or making anything like an abrupt turn,

showed an inclination to slide sidewise rather than to swing upon the castor. The effect was to break or twist its lever or the levers hanging this castor, and wheel pátterns were made for us by a first-class pattern-maker by the name of John Field, who was at that time and still is the head pattern-maker for J. I. Case & Co., of Racine, but I secured his services to make my gear patterns and my other difficult patterns.

My efforts testing and trying to make the machine work satisfactorily during that entire grass and grain harvest—my aim and object—were to so construct the machine that the finger bar would automatically adjust itself to the inequalities of a rough surface when used as a mower, while being at the same time subject to the control of the operator through the introduction of the lever P, and I would say that a mower was *any* principal ambition. In this machine spoken of my draft was too high. Its tendency was to raise the guard points from the surface; hence it was necessary to work it more as a rigid bar in its torsional line than as a self-adjusting
bar, though my mechanism was then constructed for the
133 purpose of allowing it to adjust itself; which I finally accomplished completely in the four machines that I have spoken of as being reconstructed in the spring of 1865.

In the construction of this part of my finger-bar attachment in 1863 the draft rod was connected at its forward end to the main shaft or axle outside of the driving wheel. My shoe which carried the finger bar was made similar to shoes in other machines at that time, with the exception of a pair of ears or lugs cast upon its upper surface at its forward end, by means of which I connected the rear end of the draft rod to the shoe. The result was that the line of draft from the axle down to the front of that shoe had a tendency to roll the guards upward too much. In 1864 and 1865 I changed the forward end of the draft rod from the axle or driving shaft to the forward end of the main frame, as is shown in the Patent-Office model of 1868. I also turned up the forward end of the shoe and cast a boss or hub at its forward end, through which I inserted what is called a dead-eye, and connected the rear end of the draft rod to the dead-eye by a hook on the rear end of the rod, forming a snipe-bill joint.

In my machine of 1863 my draft rod was composed of two pieces, making two joints at right angles with one another, a bolt passing through the ears on the shoe and this lower piece of my draft rod. This bolt was parallel with the finger bar. The other bolt, connecting the rear end of the forward portion of the draft rod, was pivoted, about an inch or an inch and a half forward of the last-mentioned bolt or joint, by an oblique pivot, the object being, as it will be readily seen, that the draft rod turned with the shoe when folding the finger bar for transportation over the road or from field to field.

It will be readily seen that in the absence of the last-
134 mentioned joint in the draft rod that when so folded the upper end of the finger bar would stand backward instead of standing vertical, or slightly pitched forward as it should, while with this joint I was enabled to place my finger bar when in a

folded position at any desired angle to the main frame. The snipe-bill joint of 1864 and 1865, being more simple, had the same capabilities of adjustment as the joints used in 1863; and in the spring of 1866 I constructed this joint with an eye in the forward end of the hinge bolt, with a long shackle nut screwed upon the rear end of the draft rod proper. The object in that construction was to enable me to readily adjust that rod to its proper length, as with my meagre facilities I was unable to get a blacksmith who would make two of those draft rods of an equal length.

In the machines constructed in 1864 I enlarged the stud member of the swivel joint M and inserted it in an iron box bolted to the upper surface of the rear left-hand corner of the main frame, and when sufficiently closely confined that broke at the shoulder. The only machine of that year's construction that I remember of being with in the field was on the farm of George Stearns, town of Warren, Lake county, Illinois; and, if I remember rightly, we made some two or three different attempts with that machine to make it perform satisfactorily, and I gave it up for the reasons before mentioned as to Mr. Cleveland. Both the machines of 1863 and 1864 were failures as to operation. I will also say that Mr. Stearns became discouraged and disgusted and would give the machine no further trial.

Q. 7. State how fully you devoted your time to this matter during the years 1863, 1864, and 1865.

A. I devoted my entire time—days and often nights, frequently working nights in making changes and repairs—to have
135 them ready to take to the field the next morning. Mr. Dooley's farm was some six or seven miles from town, and in 1864 I prosecuted my efforts to the extent mentioned in my last answer, and I was practically prohibited from doing more in 1864 by Mr. Cleveland's action, together with Mr. Stearns refusing to give the machine any further trial. I may say that that is the only one of the 1864 machines that I saw in the field; that is the only one I can remember, at least.

Q. 8. In testing machinery of this kind what periods of the year and what kind of days can be used?

A. Well, there are but very few weeks of the year—say about two months, from about the 1st of July to the 1st of September—that practical tests and experiments can be made. Fair weather is required, of course; that kind of machinery is not practically used in rainy, bad weather. Many farmers object to cutting grass or grain even in cloudy weather, through fear that grass or grain cut in such weather may be damaged before it can be properly taken care of after cutting. I will say that this kind of machinery is one of the most difficult that inventors ever encounter, from the fact that the season is so short for practical testing, and after making the test in the harvest of one year and making such changes as may be suggested they have to wait for the succeeding year to put the changes in operation; and as we had no crops of our own we were compelled to make our experiments on the farms of other people, and we found it very difficult to secure the necessary accommodations

for our experiments, from the fact that it is the time of year when the farmer's time is the most valuable, together with the liability of injury to his crops by his neglect to secure them at the proper time.

Q. 9. What inducements, if any, did you offer during 1863
136 and 1864 to farmers for the use of their fields and teams in prosecuting your experiments?

A. Well, sir, the best that we were able to do in my experience was to offer to sell the machine to the farmer who granted us those privileges and assistance at about their own price, if the machine proved successful on going through his harvest, together with our own services in running the machine for him in cutting his crop, if we succeeded in cutting it. I may as well state that there was quite a variety even at that early day of very good machines. The market was well supplied with them and the machines well represented by the agents of their manufacturers, and it was quite natural that those interested on the parts of others, agents or manufacturers, should decry and oppose our machines and our efforts.

Q. 10. During the time your machines were being tried, in 1863 and 1864, state whether or not you attended them personally in the field and gave them your personal time and attention.

A. As to 1863, I did, together with a very large part of the time of Mr. Trumbull Kent, whom I have before mentioned, and in 1864 to the extent that I was permitted to do by Mr. Cleveland and the circumstances I have named. I may say that I continued this close practical application of my entire time through the season of 1865, going from one machine to the other and observing their operation with a view to further perfecting them, if possible.

Q. 11. When and to whom did you make your first sales of any of those machines?

A. In June or very early in July of 1865 I persuaded Mr. Eli Wilder, who was a personal friend of mine, to take one of my machines of that year out to his farm and try it, with the understanding that if the machine proved successful he should have that machine at a very low price, compared with the market price
137 of standard machines; and that machine worked so well that, through the aid of Mr. Wilder, I was able to get three more into the field that season on the same terms. The next one, if I remember rightly, was taken by Mr. John Garfield, and I will state here that I understand they both claim the credit of taking the first successful machine. The other two went, one of them to a brother-in-law of Porter Brothers, by the name of Merchant, of Benton, the other one by Mr. Schouber, of the town of Warren. I have the Merchant machine now in my possession, after having run some eight or ten seasons.

Adjourned to Wednesday, April 27th, at 2 o'clock p. m.

APRIL 27TH, 1887.

Parties met pursuant to adjournment.
Present: As before.

Mr. GRAHAM'S examination continued:

Q. 12. You have spoken of having the machine used by Merchant, sold to him in 1865, in your possession at the present time. Where is that machine?

A. I have. It is in storage at 45 and 47 South Canal street, in this city. That machine is as it was in 1865, when sold, mechanically, except it has the main shoe of 1867, I think, which was made to receive a new improvement I had made on the mower, and I think that the bracket at the joint M^1 was changed in the season of 1865 or 1866 to the form of joint shown in the joint M^1 in the model before us. I think that yesterday in speaking of the joint M^1 in my model of 1863 I stated that that joint was a snipe-bill joint. I think now that I was mistaken as to that. I think that joint was more nearly like the joint in the machine of 1863 than a snipe-bill joint—like the joint shown in the drawing of my 1867 patent, No. 67041.

Complainants' counsel offers the machine referred to in the
138 last question and answer in evidence, and requests the notary to mark the same for identification "Complainants' Exhibit Graham Mower, 1863."

Q. 13. You have referred to the arrangement between yourself and George Cleveland. Look at this paper which I now show you and say what it is.

A. It is a copy of the Cleveland contract spoken of, with the exception of the signatures. The original, when executed, was left in the hands of Mr. Cleveland's attorney, F. E. Clark, of Waukegan, Illinois, to make a copy, and the original and the copy unsigned remained with the attorney until the original was cancelled, September 13, 1864, when this copy was delivered to me, and has remained in my possession ever since. The contract is now in the same condition that it was on the date of cancellation.

Complainants' counsel offers the paper identified by the witness in evidence, and requests the notary to mark the same for identification "Complainants' Exhibit Graham-Cleveland Contract."

Q. 14. State what changes you made in your machine, so far as regards the claims in controversy in this suit, after your trials of 1864.

A. I abandoned the castor-wheel arrangement altogether, and as a mower left out a feature that I haven't before mentioned in this deposition, called in the patent of July, 1867, the clearer. I changed the main shoe where the draft rod connects, raising the forward end of the shoe and casting a boss or hub upon it to communicate the draft to a higher point than formerly in order that the draft should, as originally intended, carry the finger bar when upon a smooth surface as level as possible while running free and uncontrolled by the controlling mechanism, so that it would while running on a

level cut a uniform height and at the same time would automatically surmount bogs, ant hills, and rocks that are very
139 frequently found in meadow lands, particularly in wild lands.

In order to permit automatic adjustments to the surface the hand lever by which it was operated by the driver was provided with a quadrant, with teeth and notches between the teeth, the notches being enough wider than the size of the catch bolt or latch which was inserted in them to allow the finger bar to roll sufficiently, independent of the lever, for all practical purposes in such self-adjustment. At the same time, through the intervention of the hand lever, the operator could instantly raise the guard points to surmount the larger obstructions within his observation, or lower the guard points below a level sufficiently to cleanly cut lodged or down and tangled grass or grain.

Another change in addition to the leaving off of the castor wheel was to put a hound or heavy lever upon the top of the pall or tongue (the tongue still remaining pivoted to the main frame), this hound passing back to about the center of the main frame, where by a latch arrangement it connected with a circular ratchet that held the frame in any desired relation to the tongue.

I believe these are the principal changes that I made in 1865, and were used until 1869, when I gave up the undertaking of the manufacture of the machines for the want of capital. I perhaps made other changes that I don't now remember. It is so long ago that some changes may have escaped my memory.

Q. 15. You have stated how you tested and tried your machines during the years 1863, 1864, and 1865. State whether or not you had any other means or facilities for making such trials than you have mentioned.

A. I had not, and if I had I think now that I should have
140 preferred to have made the tests in the manner that I did in order to have had the opinion of practical farmers on the results.

Q. 16. You have mentioned delays in procuring your patent sued on. State whether or not you have directed or desired these delays.

A. I most assuredly did not. As I have before stated, I was exceedingly anxious to procure my patent at the earliest possible day for the reasons I have named in answer to a previous question, and had I known that such delay was not absolutely necessary I should have changed my solicitor long before I did.

Q. 17. What was your object in withdrawing the subject-matter of the first and second claims of the patent sued on from the application filed by Munn & Co.?

A. When I learned that I could take such a course I did so for the two reasons of cheapness and expedition, as Mr. Renwick informed Mr. Werden that it would cost a good deal less money and could be accomplished in less time than by appeal, taking into consideration that I was about to apply for another patent on later improvements.

Q. 18. You have told of sending your model and application to

Munn & Co. State when that application was actually filed by them if you now know.

Question objected to as incompetent, the record in the Patent Office being the best evidence and available for use as such in this case.

A. My recollection is that it was filed on the 5th day of December, 1865. I obtained this information, I think, in the fall of 1878 from the file wrapper of that patent. This was the first that I ever knew of the delay.

Answer objected to as incompetent testimony.

141 Q. 19. Do you know or did you ever know why this delay occurred?

A. I do not know nor never did know why it occurred.

Counsel for complainant offers in evidence a certified copy of the file wrapper and contents of letters patent No. 67041 issued July 23, 1867, to Alvaro B. Graham and others.

Adjourned to Thursday, April 28, at 2 o'clock p. m.

APRIL 28, 1887.

Met pursuant to adjournment.
Present: As before.

Counsel for complainants offers in evidence a certified copy of the file wrapper and contents of letters patent of the United States No. 74342 issued February 11, 1868, to Alvaro B. Graham, the same being the letters patent sued on in this cause.

Q. 20. State what your financial condition was at the time you made the invention in controversy and from that time on until the issuance of your patent in suit.

A. My worldly goods consisted at that time of 160 acres of wild prairie land in Jones county, Iowa, which I suppose was worth somewhere from three to five dollars per acre, but which was mortgaged for two hundred and fifty dollars, and my financial condition continued to grow worse instead of better until the fall of 1869, when I gave up the attempt to build up a manufacturing business on my machine, and at the last-mentioned date my land was gone—sold for taxes—and I was, for a poor man, very largely in debt, all of which debts I have paid off in later years, together with interest. My only means of supporting my family, of a wife and three children, was my industry. I was working by the piece, making from twelve to fourteen dollars per week, at my trade. This constituted my entire resources during all that time. In my arrangement with
142 Porter Brothers I was to receive and did receive just the amount necessary to pay my actual living expenses of myself and family, and we lived pretty close to the ground, too.

As I have already stated, I was compelled to borrow money from my uncle, David Graham, of Coldwater, Michigan, to prosecute my application for a patent, and before my note came due my uncle

died. When the note came due it had passed into the hands of the administrator of his estate. He sent the note at maturity to Waukegan for collection. I was wholly unable to pay it. Suit was brought in the county court of Lake county to collect it. I immediately, upon being served by the sheriff with the summons, went and confessed judgment to save costs. I was not able to pay the judgment for several years, and then only out of money got from my brother when he became interested in the patents. My condition was such that I was also sued by others, notwithstanding I was doing everything I could to pay my debts.

Q. 21. Then, taking everything into consideration, did you or did you not exercise all the diligence possible in developing and perfecting your invention and in applying for and obtaining patents thereon?

A. I did.

Q. 22. State exactly what you were seeking to do in the making of your invention in controversy.

A. I was seeking to make a mowing machine of a light, cheap, and simple construction, possessing an automatic capability of the finger bar or cutting apparatus for adjusting itself to the inequalities of the surface over which it was passing, while at the same time completely under the control of the operator, so that he could, by a lever near his hand, depress the cutting apparatus or the guard points for cutting in a cleanly manner lodged or tangled grass and grain, and elevate the guard points above their automatic
143 capacity for passing over such obstructions as are frequently met with in wild meadows, particularly without lifting the finger bar and cutting apparatus from the ground, allowing it always to rest upon the ground, thereby saving the strain and liability to breakage when suspended for the latter purpose.

Q. 23. In what way and to what extent and by whom has your machine been manufactured by your authority, say, from the beginning of your operations down to the expiration of your patent sued on in this cause?

A. Well, I may say that the first manufacturing of my machine, after perfecting it, as stated, in 1865—it was manufactured in a very small way from the fall of 1865 to the fall of 1869, inclusive, by W. B. and C. A. Werden, of Waukegan, and through their mismanagement and lack of capability and capital for conducting a business of that character they failed financially, so far as said manufacturing was concerned.

In March, 1870, I received a letter from my brother, Hugh Graham, at Bloomington, Illinois, informing me that an old-time manufacturer by the name of Flagg, of that city, was desirous of getting a license of manufacturing my mower. I went to Bloomington to confer with him on that matter, and we failed to agree, but during my visit there I made an arrangement with the Bloomington Manufacturing Company to manufacture our machine on royalty of $10 per machine. They manufactured fifty that year, and, through the interference of the Werdens spoken of, they only manufactured one year—

that of 1870. I desire to state here that license included all three of my patents.

I have omitted to mention a license to Amos Waterman, of Waukegan, Illinois, in January, 1870. Afterward, I think in the
144 same month, I issued a license to Jacob C. Bloom. Both of these licenses were for ten dollars royalty, and covered the use of all three of my patents.

The next license I granted to Wayne Agricultural Company, at Richmond, Indiana. That license related chiefly to the inventions specified in claims one and two of the patent sued on in this case. That license was dated November 21, 1878. In September, 1880, I granted a license to the Ann Arbor Agricultural Company of Ann Arbor, Michigan, at the rate of three dollars per machine, for the same invention. They both simply wanted to build a mower, and didn't want any of my reaper features. I would state here that both of the last-named licenses were sought by the parties named.

In January, 1881, I granted a license to the Geneva Lake Crawford Manufacturing Company of Geneva Lake, Wisconsin. They also sought a license and paid us money in advance of a license. In June, 1881, I granted a license to the Remingtons, of Ilion, New York, at the rate of three dollars a machine, and in January, 1882, I granted a license to Albert J. Glass, for use at Janesville, Wisconsin, and some time in 1883 or '4 I also granted a license to Emerson, Talcott & Co., of Rockford, Illinois. I sold each of them a shop right, paid up in advance, for the remaining life of the patent. All these were licenses in the usual way, and nearly all of them at a specific rate per machine.

Then, through litigation with parties for the pirating of my rights, I have granted on settlement some few paid-up privileges or licenses. The first that I recall was the Remingtons, of June, 1881. They took a license and paid at the regular rate of three dollars per machine for all machines built up to June, 1881, and reported to me, and paid the royalties from that time on to the expiration of the patent.

145 In August, 1881, a Mr. David H. Burrell came to me and sought a settlement or an arrangement by which a suit then pending against the Warrior Mower Company of Little Falls, New York, might be dismissed, and we finally came to an agreement or a lump settlement, we not knowing how many machines they had built and Mr. Burrell disclaiming any knowledge himself as to that fact, and I transferred my claim to him under a proper and specific understanding with him in relation to it, as the papers in that case will show, for the sum of twelve thousand dollars. This was in relation to the first and second claims of the patent sued on in this case.

Some time in the fall of 1879—I think 1878 or 1879—I brought a suit against the Geneva Lake Crawford Manufacturing Company of Geneva Lake, Wisconsin, for the infringement of the two claims here in controversy. This suit was prosecuted to a final judgment for a trifle over five thousand dollars.

I brought suit against the Johnston Harvester Company of Brock-

port, New York, I think, in 1880, and after taking our *prima facie* testimony in that case a gentleman, whose name I cannot recall, who represented himself as the president of the Johnston Harvester Company, was very desirous of settling the suit, and he represented to me that he had great assurance of defeating us in court. He had the advice of George Harding and John R. Bennett of his ability so to do, and, there being some little difference of opinion in my own crowd, I finally settled that case with him for the sum of ten thousand dollars. He could not give us the number of machines which contained the mechanism of my first and second claims, as they were manufacturing quite a variety of machines at that time, and he did not know what proportion of them were of our kind.

146 In the year 1874 or 1875, I wouldn't be positive which, I brought suit against Gammon & Deering for infringing these two claims by selling the Sprague mower of Providence, Rhode Island. In 1877 the court rendered a decree in that suit, sustaining the patent and the infringement, and while taking testimony before the master in accounting a settlement was effected for two thousand six hundred and fifty dollars.

In 1879 or 1880 I brought another suit against William Deering for the infringement of the two claims last mentioned on the Warrior mower. My recollection is that after taking our *prima facie* testimony in July, 1883, that case was settled for five thousand dollars.

In June or July, 1877, suit was brought against C. H. and J. L. McCormick, and in January, 1880, that suit was heard before Judges Drummond and Dyer, and some time in the month following they held the patent was good and the defendants infringed; and, after a good deal of delay, the court ordered a final decree for over eighty-five thousand dollars, being at the rate of $3.00 per machine.

The Wayne Agricultural Company's license of November 21, 1878, which I have already referred to, was written by their secretary, and I think there was no reference to the claims one and two, but it referred directly to the Sprague mowing machine which they desired to build, which only embraced those two claims. They agreeing to do certain things on their part in that license which they failed to do, I afterwards, in 1881, December, 1881, served a notice of revocation of that license upon their president, in their office in Richmond, Indiana, and I brought suit against them for manufacturing the Crawford mower as an infringement, and while taking our *prima facie* testimony we effected a settle-

147 ment, they paying me nine hundred dollars in cash for three hundred machines they were liable for at that time and giving me three notes of their company, for fifteen hundred dollars each, for the future use of those two claims during the remaining three years of the patent. Those notes were payable in one, two, and three years, all of which have been paid. The notes were given on the basis that they had manufactured two or three hundred machines per year—it was possible they might reach five hundred, but probable that it would be less—though it was a lump settlement, so far as the notes were concerned. But they insisted upon paying the

nine hundred dollars for the three hundred machines, at three dollars per machine, under the license before spoken of, claiming the license to be in force, which fact was set up as their only defense. Upon this settlement this license was surrendered.

I would like to state that all of these transactions on my part were as the general agent of Hugh Graham, though I had an interest in the proceeds, except in this suit; in this suit I am a direct party.

Q. 23½. Then, so far as these licenses have been granted at any specific rate per machine for the inventions specified in the two claims of your patent sued on in this cause, what was that rate?

A. Those licenses, with the exception, I think, of the Wayne Agricultural Company, were for five dollars per machine, with a rebate of two dollars per machine for honest reports and prompt payments.

The Wayne Company license, as I stated, was written by Mr. Baxter, and, I think, was for straight three dollars. Three dollars is the lowest that I have ever accepted or received as a license per machine. After our bargain was all made and the license to the Wayne Company was nearly written, about ready for exe-
148 cution, I happened to think of a little feature that was contained in another patent, a spring coupling pin for the connection of a pitman and sickle, and I made them a present of the use of this device, my object being to introduce that pin to the manufacturing public, through the use of it in their machines, not only as to the mower the license was for, but also their Royce reaper, which they were building extensively.

Q. 24. I understand you to say that the Warrior Mower Company paid twelve thousand dollars and William Deering five thousand dollars in settlement under this patent. Is this correct?

A. As to Mr. Deering it is. As to the Warrior Mower Company I conveyed to one of the directors, Mr. David H. Burrell, who arranged for the company. The amount was twelve thousand dollars.

Q. 25. What machine were these parties, Mr. Deering and the Warrior Mower Company, manufacturing for which they paid you in the aggregate $17,000?

A. They were manufacturing the Warrior mower, patented by Frank Bramer, the same machine the defendants in this case are manufacturing and this suit is brought on.

Q. 26. Was Frank Bramer connected with the Warrior Mower Company at the time of its settlement, as above mentioned?

A. He was, as I was informed by Mr. Burrell.

Answer objected to as hearsay.

Q. 27. State whether you ever met Frank Bramer or had any conversation with him in reference to his claiming to have made the inventions specified in the first and second claims of your patent in suit. If so, please state fully all that ever passed between you on this subject.

A. I never met Mr. Bramer, but I came very close to him once,

which was, as near as I can recollect, about two months before
149 the first hearing spoken of before Judges Drummond and Dyer. I stepped into my attorney's office about noon one day, and they informed me that Mr. Bramer had called there to see me. He had left with my counsel several affidavits for my benefit, together with a proposition to be submitted to me by my counsel. Those affidavits were all sworn statements in relation to the date of the construction of his first machine. The proposition he had left for me was that if I would desist from——

Counsel for defendants here interrupts the witness and asks if he is stating what he knows of his own knowledge as received by him personally from Mr. Bramer, either in writing or verbally.

I am stating what my counsel stated to me as Mr. Bramer's proposition.

Counsel for defendants objects to all the above answer which is hearsay, and protests against further statements of what is only hearsay.

As I was saying, the proposition he had left for me was that if I would stop prosecuting his licensee, Mr. Deering, or Gammon & Deering, for infringing my patent by the building of the Warrior mower, and also agree to leave his home company, the Warrior Mower Company of Little Falls, New York, undisturbed, that he would permit me to collect the balance of royalties or monies for infringement of the patent sued on here; but if I wouldn't agree to these terms he would interpose his powers in behalf of the McCormicks to defeat me, and at the time that I entered the office he had gone out, and I, having some business to attend to, didn't remain there to see him at all, but I instructed my counsel to say, in substance, to Mr. Bramer for me that if these infringing claims of the
McCormicks and others were ours we did not wish to buy
150 them. If they were not ours we were not putting up jobs to wrongfully obtain money from any person. My counsel read those affidavits—I read them—and the next that I saw or know of those affidavits I met them in the McCormick case as interposed against me. I took the cars some time afterward and went to Fabius, N. Y., and consulted the gentlemen who had made those affidavits. I left them with the full assurance that Mr. Bramer's generosity was, to say the least, of a very cheap quality.

Counsel for defendants objects to so much of the above answer as is hearsay, and also to so much as relates to affidavits or other instruments in writing, unless the same are produced and offered in evidence.

Q. 28. Please examine this letter which I now hand you and state whether you recognize it; and, if so, what it is, when you first saw it, and all you know about it.

A. This is a letter from Frank Bramer, dated October 20, 1879, to my counsel, Banning & Banning. I first saw this letter a few days after its date—two or three days, say. It is a letter that was con-

sidered in matters we had been talking about, and has been preserved in files of papers pertaining to my litigation.

Counsel for complainants offers said letter in evidence, and the same is marked "Complainants' Exhibit Bramer's Letter."

Counsel for defendant objects to the letter offered above and marked "Complainants' Exhibit Bramer's Letter," first, because not properly identified, and, secondly, because immaterial to the issues in this cause.

Said letter is as follows:

151 Arphaxed Loomis, president; Frank Bramer, managing agent.

Office of the Warrior Mower Co.

W. G. Milligan, treasurer; Gerret Drake, financial agent.

LITTLE FALLS, N. Y., *Oct.* 20, 1879.

Banning & Banning.

GENTS: Gammon & Deering, of Chicago, my licensees, inform me that you threaten them with suit for infringing the first and second claims of Graham's 1868 patent in building the Warrior mower. Had you threatened this Co. we would have paid no attention to it, but to save G. & D. annoyance I will say to you that the devices covered by the claims above mentioned are shown in my patent of 1865; and, further, that a machine made by me years before I made application for my patent had precisely the same devices. Said machine was a full-sized working machine and was used, more or less, for six or seven years. At the time of building this machine I was too poor to perfect it or to obtain a patent; consequently was obliged to work on it as I could spare time and money. If these facts were known to McCormick no doubt they would be an advantage to him in the suit with your client. It will, of course, depend upon him, Graham, or his attorneys whether they are made public or not. Having stated the above, you can, of course, take your pleasure in the matter. I have advised G. & D. to let you proceed if you so desire.

Yours, etc., FRANK BRAMER.

Q. 29. State whether you have ever had any conversation or correspondence with C. C. Bradley, of Syracuse, New York—I mean the Mr. Bradley who has testified for the defendants in this cause—
152 in reference to matters relating or supposed to relate to the inventions specified in the first and second claims of your patent sued on. If so, please state fully all that has passed between you on this subject.

A. I think, in the spring of 1881 or 1882, I received a letter from Mr. Bradley stating that he was getting up a new mower, and a friend of his, and also a friend of mine, who is interested in mowers, stated that he thought he was running against me; and in his letter he stated that he had no desire to appropriate other people's inventions, and requested me, if convenient, to come to Syracuse and see

his machine and bring my patent, and between us we would try to determine whether he would be liable under my patent.

Soon after the receipt of this letter I had to make a trip down through the State of New York on business, and I called on Mr. Bradley at his works, at Syracuse. He had no machine to show me, but stated that the only one that he had got out had been sent out in the country some 30 miles, to a spring fair, which he said was customary, and all that he could show me was some of the parts that were about ready for setting up in another machine, but nothing by which I could determine whether his construction, when completed, would infringe any portion of any of my patents; but he was very desirous of taking a license from me for future operations. He would rather pay a small amount, even if he wasn't liable, than to go on and take the chances; and he said that if he had a machine to show me and I considered it an infringement, particularly of the mechanism secured by the first and second claims, if we couldn't agree he would either discontinue his efforts on that machine and manufacture a machine he had been manufacturing for some number
153 of years past; and, considering the uncertainty of whether his machine did infringe or not, he offered me the sum of two hundred and fifty dollars for a paid-up license for the remaining years of my patent. I said to him that I would like to accommodate him, but I could not for a moment entertain any such proposition. I stated to him that such a transaction as that on my part would be taken advantage of—I think I used the language—by every "patent pirate" in the country, who had been pirating and were pirating my rights. He suggested that there never would anybody know anything about this transaction. He wouldn't mention it, and of course it would not be policy for me to. I said to him that I would be compelled to either develop this deal, if made, or commit perjury the first time I might be placed upon the witness stand in a case of accounting, and I could not so far belittle the value of my property in this right as to consider it at all. I said to him that it would be used, if I did it, as my measure of damages; that the court would hold me to the lowest estimate that I had ever by my act placed upon it.

He pressed me very hard. He said, Your counsel, Banning & Banning, if they were here, would advise you to take it. I offered him a license at the regular rates if he wanted it, and he could use it or not as he saw fit; and in relation to my counsel advising me to accept it, as the last thing as I was leaving his office, he asked me to consult my counsel on my arrival home, and if they agreed with him that it would not be injurious to my interests to send him a license and he would remit the two hundred and fifty dollars. I told him that I would so consult them, but I knew what the result would be, as that matter had been too often discussed between us to leave any doubt in my mind as to their views.

154 Some few weeks, I think, after my return I received a postal card—I think it was from Mr. Bradley—saying he would be here by a certain day and he would like to meet me at my counsel's office. I came into the office the next day about the time he sug-

gested and found Mr. Bradley here laboring with my counsel to advise me that I could grant him a license as he proposed and for the price. He met with very poor success. I met him again some time after this in the office of Gibbs and Sterrett, this city, at which time he renewed his appeal to me for a license of that character. At another time after that—I can't say how long, perhaps a month or two—a book-keeper in that office by the name of Dunbar took the trouble to hunt me up one day to show me a telegram that he had just received from Mr. Bradley, from some point in Wisconsin, asking Mr. Dunbar to be sure and secure my presence that evening or the following morning, as it was very important that he should see me. I said to Mr. Dunbar that I didn't care to see him, and I told Mr. Dunbar what Mr. Bradley's mission was.

It ran along for some time—I don't know how long—when I received a dispatch from Mr. Bradley saying that he would call at my house that evening at about seven o'clock, and, having become completely exhausted and tired with his importunities, I told my family at tea that I was expecting such a caller that evening and I would go out and take a walk and they could say to him that I had gone out; they didn't know what time I would return. I think the next time that I came in contact with Mr. Bradley he wrote me a letter asking me to meet him at his uncle's factory, on Desplaines street, Chicago, on a certain morning, which I did.

155 The above answer objected to by counsel for defendant as irrelevant, immaterial, as not in rebuttal, and so much of it as relates to letters, postal cards, telegrams, etc., as incompetent.

Adjourned to April 29, 1887, 10 o'clock a. m.

APRIL 29, 1887.

Parties met pursuant to adjournment.

Present: Ephraim Banning, Esq., for complainants, and same as before for defendants.

Mr. GRAHAM, resuming his answer:

And he there showed me a model containing some new parts, claiming that the model had been burned in part; also claiming that the mechanism shown in the model was of his own invention, stating that he made that model in 1863. I asked him why he did not apply for a patent, as at that time such inventions were eagerly sought by manufacturers, and at this time, to my certain knowledge, and at the time spoken of by him, 1863, he, together with his father and brother, under the name of C. C. Bradley & Sons, were heavy manufacturers of mowing machines. I know this to be a fact for the reason, first, that I was acquainted with a machine known as the "Hubbard," manufactured by that firm before the time spoken of by him, and the further fact that in January, 1872, I visited their works, at Syracuse, New York, and endeavored to induce them to drop the machine they were then building and take my machine on a license instead, knowing that they were building the Hubbard machine on a royalty, but I was unable to make such an arrange-

ment; and in those interviews which I had with them, in which I illustrated to them, by drawings and models of my machine, and its advantages over the Hubbard and other machines on the market, both in cheapness of construction and decidedly superior capacity in the field, and in all of this talk they never mentioned one word to me at that time of having within their reach anything in
156 the way of a mowing machine that approximated mine nearer than the Hubbard machine, which they were then building and which has never been considered to contain my inventions.

The reason that they gave me for declining my proposition was that it would involve a complete change of their patterns, or, in other words, they would have to get up an entire set of new patterns, and they had a market for all the machines they could manufacture of their then present machines.

The objection entered before adjournment last night repeated to above answer by counsel for defendant.

Q. 30. How fully were the facts and circumstances connected with the making and early history of your inventions here in controversy inquired into in the McCormick case and who were then examined as witnesses in relation thereto, so far as you now remember?

Counsel for defendant objects to the question as irrelevant, and also as it calls for parol evidence of that which is a matter of record in this court.

Counsel for complainants replies that he has heretofore offered to introduce the whole or any part of the McCormick record into this cause, but that defendant's counsel has declined to consent thereto; and counsel for complainants now hereby renews said offer and suggests that if the same be accepted it will render the further taking of testimony, except as to one or two matters, unnecessary.

Counsel for defendants says: Suppose the statement of complainants' counsel to be true, it affords no ground whatever for an attempt to prove by parol that which is a matter of record in this court, for counsel for complainants well knows or ought to know that he has a complete remedy by motion in court to admit anything in
157 the record in the McCormick case or any other case which is proper as evidence in this cause; and counsel for defendants here offers to meet complainants' counsel in court to-day or any other day for the purpose of bringing to the consideration of the court any such motion as he may wish to present.

Counsel for complainant accepts this offer in reference to going to court.

A. The circumstances, dates, and so forth, were inquired into very fully in the McCormick case—I may say exhaustively—and the complainant in that case sought to secrete and cover up nothing; but, on the contrary, gave the names of various persons who had in any way knowledge of the facts, and the defendants introduced Richard Dooley, George Stearns, W. B. Werden, C. A. Werden, and

Mr. Minskey, whose given name I do not remember, and in rebuttal complainants introduced Eli Wilder, Fenner W. Ward, J. Brown Porter, a member of the firm of Porter Brothers, who is now dead, and A. B. Graham, the present witness.

Counsel for defendants objects to the foregoing answer as irrelevant, incompetent, and not proper rebuttal, and gives notice of a motion to strike out.

The witness states that he desires to make the following explanation:

In relation to the finger bar running into the bog and twisting it, as stated in answer to question 4, I want to say, as I have said later on in this deposition, that our draft was too high, having a tendency to lift the guard points or the cut to an upward inclination; hence it was necessary to hold the bar by its lever attachment to a level.

Adjourned by consent till Monday, May 2, 1887, at 2 o'clock p. m.

MAY 2ND, 1887.

Said parties met pursuant to adjournment.

Present: As before.

158 Cross-examination by Mr. THACHER:

X Q. 31. In 1862 and 1863 you was not very well informed as to the prior state of the art in mowing machines, was you?

A. I was not, beyond my observations of machines then in the market.

X Q. 32. In 1862 had you ever seen a machine with a hinged finger beam?

A. I think that I have seen the Buckeye and the Hubbard, if my memory serves me. They were hinged finger beams.

X Q. 33. Prior to the construction of your model, in the winter of 1862–'63, had you ever seen a mowing machine in which the finger beam was rocked or tilted?

A. No, sir; I had not; at least, that is to the best of my recollection. I have no recollection of ever having seen one.

X Q. 34. You did not know at that time that this movement of the finger beam had ever before been accomplished, did you?

A. No, sir; I was not aware of it at that time.

X Q. 35. Where is that model that you made in the winter of 1862–'63?

A. I think my children wore that out or broke it up playing with it as a toy. As I stated in my direct, it was made of wood; it was a very frail affair, simply to illustrate my idea; and, after having accomplished my deal with Porter Brothers, in January, 1863, I had no further use for it, as I thought at that time. I might say that I have learned since that it would have been of great value to me had I preserved it.

X Q. 36. When did you last see that model?

A. Well, sir, at this distance of time it would be very difficult to

state. I should say, however, some time during the summer of '63. I will add here that this model was nothing but a skeleton of the machine, showing the connection of the finger bar to the gearing carriage by means of the parts known in the patent sued on
159 as the vibratable link and draft rod and the swivel joints connecting the same to the main frame.

X Q. 37. You may describe, if you please, the construction of that model, naming all the parts which it contained and their construction and organization.

A. Well, sir, the main frame was a small piece of board—I should say, perhaps, six inches long; maybe eight; that represented the main frame. My ground wheels were made of light pieces of board cut out with a drawing knife and a wooden axle running through to connect them with the main frame. My vibratable link was made of a piece of wood running from the left-hand rear corner of the main frame, to which it was connected by a wooden section of a joint, which was inserted into the rear corner of the main frame, having a hole in the outer end of the last piece mentioned, through which the upper end of the vibratable link was inserted and held in its place by a small pin through the journal, which was whitted out on the upper end of the vibratable link. At the lower end of the vibratable link was a pair of ears formed, and corresponding ears formed on the inner end of the piece representing the finger bar. When those ears were interlocked there was a wire passed through the ears of both the vibratable links and the ears of the finger bar that formed my hinge joint.

My draft rod was made of a small piece of wire and fastened to a projection on the front edge of the finger bar to a sufficient degree to represent a shoe. The rear end of my draft rod was fastened to the front of this projection by a wire staple, the forward end of it being turned into an eye fitted around the main axle outside the driving wheel. I then had a small lever made fast or pivoted in a mortice to the board spoken of as a main frame, with a short arm extending upward upon the vibratable link, which I think
160 was a wooden pin driven into that member. The two parts last mentioned were connected by a wire. This lever was for the rocking of the finger bar. In that model I had no lifting lever, as I now remember. I would add, however, that there were no gears in that model; it was just simply a skeleton to show what I considered my invention.

X Q. 38. Prior to the building of your first machine in 1863, had you any experience in building mowing or reaping machines?

A. I had not, except in 1862—in the spring of 1862—I took the old Kirk, Marsh and Smith machine, mentioned in one of my former answers, tore it to pieces and reconstructed it into a two-wheeled machine with a hinged finger bar. I used the driving wheel of the old machine, together with the gears and the sickle and the guards, I think. To constitute my truck of two wheels I used a common wooden wheel, like a common wagon wheel, simply as a carrying wheel for one side of my main frame. That constitutes my experi-

I found that I had taken a very large contract on my hands, as it was more than I could do, with a pretty good man to help me, to keep one of them running any considerable time at a time, and, as I have stated in a former answer, I reconstructed four, at least, of those machines—1863 machines—in the spring of 1865 and made them a success. They worked successfully through the harvest of 1865 and a good many later ones.

X Q. 44. Did you have a written agreement with Porter Brothers or was it only verbal?

A. My recollection is that we had a sort of a memorandum of agreement, if I recollect rightly, written in pencil, and to be reduced to a formal contract at a future time, but which was never done. At the end of the harvest season of '63 Porter Brothers had got all they wanted of it, and they didn't care to go farther. Hence in this case I think there was no written agreement beyond the memorandum spoken of; but we were old acquaintances and I had the utmost confidence in them, and I presume they were not badly alarmed about me.

X Q. 45. Have you that memorandum of agreement?

A. I have not.

X Q. 46. Do you know what became of it?

A. No, sir; I do not. I think it was written in one of their memorandum books. Our trade was a very brief one with a very little to it. I think I can state it from memory if you want it.

X Q. 47. What were the terms of the agreement between you and Porter Brothers?

A. The terms of that agreement, as I remember them, were that they were to furnish the means to perfect the machine and to manufacture it, and they were to pay me for my labor such a sum as would
165 carry my current family expenses along through the experimenting; and I think there was a salary agreed upon which I should have, and, if I remember rightly, there was a certain compensation to go to them for their time after the machine was perfected; and I was to have one-half of the net profits of the business, and they were to have one undivided half of the patent then in contemplation and the same rights in any future improvements so long as the business was continued in accordance with that agreement. I think that is briefly the agreement. I don't think it will vary much from that.

X Q. 48. Porter Brothers, then, considered the machine an experiment at the time they made this agreement with you?

A. They did entirely so.

X Q. 49. Won't you explain, then, how they came to be willing to commence the building of five machines when one would have been sufficient to experiment with?

A. Well, I don't know as I can explain beyond the fact that I presume they rested very largely on my confidence in making a success; and, as business men, if they had confidence that we could make a machine that would do the business that year it would be quite natural for them to want to enlarge their field by another year's market by placing the machines in different neighborhoods

the first year, together with a further fact that it would give a greater test. While the machine might be placed on a very smooth and highly cultivated farm, and in the hands of a careful and considerate party to run it, that same machine placed under adverse conditions and on a rough, stony, stumpy farm, and in the hands of a less considerate operator, the result would be very different. Hence, by diversified trial or test of our machine, we would have a better basis of results. That is the only reason that I can give for their
166 being willing to undertake to build five the first year, or perhaps it might have been by my over-persuasion.

X. Q. 50. Then they expected to put these several machines into the hands of as many different persons, did they?

A. They did, if the machines on test warranted doing so. To illustrate: We commenced very early with our first two machines. If those two machines had worked off properly, satisfactorily, worthy of the name of machines, we would have been glad to have placed the other three in the hands of anybody; and I did not know then or I don't know now or never have known that there was any law against our doing so or any standard of commerce that would prohibit it.

X Q. 51. If Porter Brothers intended simply to experiment with a machine to determine whether or not it was practical, do you think, as business men, they would have been willing to incur expense of building more than one machine for that sole purpose?

A. It is very evident that they were willing to build five machines, as I had no power to compel them to build one. I presume, however, that, never having had any experience in such an undertaking, they were not aware of the great difficulties that were to be encountered, but, like myself, thought they could go on and build this machine pretty successfully, as they could build a building or as I myself could build a wagon. The wisdom or non-wisdom of our conclusion may be questionable.

X Q. 52. You could take one machine around to different places and to fields of different conditions so as to get the variety of test that you have suggested with that one machine during the season, could you not?

A. Such a thing as you suggest could have been done, but in our inexperienced state we didn't do it that way; but, on the con-
167 trary, we done it in a very much more foolish way. I will say that that way—the way you name in your question—would be just the way I should proceed in the light of my present experience; yet in the year 1865 a very extensive manufacturer of that class of goods of my acquaintance done precisely with hundreds, if not thousands, of this kind of a machine what I in my ignorance done two years earlier, or undertook to do two years earlier, with five machines. This concern had unlimited means and facilities and the best of mechanics to aid them and somewhere from twenty to thirty years' experience in the manufacture of this class of goods, and their failure was about proportionate to mine.

X Q. 53. That is, this manufacturer made hundreds or thou-

sands of the machines to which you refer and put them into the market?

A. Yes, sir.

X Q. 54. You regarded your invention as completed in 1863, did you not?

A. So far as my plan was concerned, but so far as determining whether my plan was feasible I was not satisfied that it was completed in '63. It was a very great question, sir, in those days—in fact, I may say it was considered an impossibility by men of large experience in that particular business—whether a machine could be constructed in any manner so as to depress the cutting apparatus, when mowing or reaping, below a level of the cutting apparatus, as is evidenced in all machines that were ever built up to the time that I demonstrated that fact to the machine world. Ball, the celebrated manufacturer of Canton, Ohio, placed a very heavy bar—as heavy, in fact, as his finger bar—under his shoe to support it from going below a level. Other manufacturers that had any torsional movements to their bar whatever supported them in the strongest manner against the possibility of their going below a level. The facts of all machines up to my day were these: In cutting
168 in a field of grass or grain that had been lodged or knocked down by storm or fallen from being too heavy, too rapid a growth—all of which conditions are very common in our best agricultural sections of country—the farmers were compelled to, in the farmers' language, carry their swathe—mow all the time on one side, mow half the time. They had to run against the lay of the grain or grass in order to cut it at all.

My object was to construct and so balance a machine while it was self-adjusting, at the same time was so completely under the control of the driver, that he could with perfect safety and ease cut the grass or grain going with the lay of the grain as cleanly and perfectly as going in the opposite direction; or, in other words, he could cut all the time—cut around the field—instead of cutting one-half the time and running idle the other half; and in 1863 I was very far in my effort from accomplishing that object, but which I did accomplish finally in the machines of 1865.

X Q. 55. Please answer the question which I asked you: Was your invention completed in 1863 or not?

A. As I have stated, and for the reasons stated, I did not then nor I do not now consider it completed in 1863.

X Q. 56. When did you complete the invention? Give the date as accurately as you can.

A. I considered them completed at the close of the harvest of 1865—say, first of August, 1865; I considered it completed and perfected in all its details.

Adjourned till May 3, 1887, at 2 o'clock p. m.

MAY 3RD, 1887.

Said parties met pursuant to adjournment.

Present: As before.

X Q. 57. When Mr. George Cleveland made the contract with you in 1864 was he aware of what you had done in 1863?

A. He was.

169 X Q. 58. He knew all about your machines of 1863 and how they worked, did he?

A. He did, by hearsay. He never saw one of them work in '63, to my knowledge.

X Q. 59. What has become of Mr. George Cleveland; is he still alive?

A. I could not tell you, sir. I haven't seen him nor heard of him in a great many years.

X Q. 60. The machines made in '64 were made under and in accordance with the contract with Mr. Cleveland, a copy of which you have put in evidence on your direct examination, were they not?

A. In part they were; in part they were not.

X Q. 61. Were they not made pursuant to that contract?

A. They were made pursuant to that contract; yes, sir; but I would like to state that Mr. Cleveland, at a certain stage of the work, assumed the mechanical responsibility himself, which, as I now recollect the contract, he had a right to do, as I was employed by him by the terms of that contract; but, if I remember rightly, the contract gave me no general supervision over the work mechanically.

X Q. 62. Were the machines of 1864 constructed as shown and described in your 1867 patent or in your 1868 patent?

A. Mechanically in part they differed from both the 1867 and 1868 patents.

X Q. 63. How did they differ from the 1867 patent?

A. The difference was mainly in the attachment of the draft rod to the front of the main shoe. That shoe was turned upward more at its forward end than in the patent or in the machines of '63, and at its upper extremity it had a hub or a boss cast on it through which a hole was bored and a dead-eye put through said hole and

170 a hook turned on the rear end of the draft rod which formed, when connected to the dead-eye, what is known in mechanics as a snipe-bill joint. The feature called in the '67 patent the clearer, as attached to the '63 machine, had its upright member hinged to the main member that run next the ground, as shown in the '67 patent. This draft rod and clearer in the '63 machine and also in the patent of '67 turned with the shoe when the finger bar was folded; hence the necessity of the hinge in the clearer. In the '64 machine my shoe turned upon the draft rod or upon the dead-eye, leaving the draft rod always the same side up, whether the machine was folded or the finger bar lying upon the ground. Hence it was unnecessary to hinge the vertical member of that feature of the machine to the other part or member as in '63. In the '64 machine the member of the swivel joint marked K in the patent of '67

was inserted in a cast-iron box located at the rear left-hand corner of the main frame. I don't now remember any other substantial changes.

X Q. 64. How many machines do you say you made in 1865?

A. I can now account for four of those machines that were reconstructed out of the '63 machines. They were sold to Mr. Eli Wilder, Mr. John Garfield, Mr. Merchant, and Mr. Shauber, all of Lake county, Illinois.

X Q. 65. How many machines did you make in 1866?

A. I think we got out some eight or ten machines in 1866.

X Q. 66. You say we. Who do you mean?

A. I mean myself and those interested with me. I mean W. B. and C. A. Werden, of Waukegan, Illinois. They were to build, by the terms of their contract, fifty machines for the harvest of 1866, and they commenced the fifty machines and got eight or ten of them, I think, completed. Commencing so late in the season to build, and without facilities in fact for building, they were
171 unable to complete the whole of them, and I think they only got out the number I have named. In fact, I am positive they did not get out to exceed ten in time for that season's harvest.

X Q. 67. How many machines did you build in 1867?

A. We built twenty-five machines.

X Q. 68. How many in 1868?

A. Thirty.

X Q. 69. In 1869?

A. One hundred.

X Q. 70. In 1870?

A. Fifty machines were built, not by me, but by my license, in 1870.

X Q. 71. By whom were they built, and where?

A. By the Bloomington Manufacturing Company, of Bloomington, Illinois.

X Q. 72. Did this Bloomington Company build the machine shown in your 1868 patent?

A. Yes, sir.

X Q. 73. What was the machine called?

A. It was called the Graham machine, I believe.

X Q. 74. How long did that company continue to build that machine?

A. Only that one season of 1870.

X Q. 75. Did you ever resume the manufacture of that machine?

A. I did not.

X Q. 76. Has anybody manufactured that Graham machine since 1870?

A. Nearly all the manufacturers in the United States have manufactured that part of the Graham machine which was the substantial feature of the Graham machine. There has nobody that I know of manufactured the Graham machine entire as I manufactured it since 1870.

X Q. 77. No one has invented a machine as described and shown in your patent of 1868, then, since 1870?

A. Not entire; but various people have manufactured that portion of that machine described in claims 1 and 2 and shown
172 in that patent under one form and another of construction, presumably by me, for the purpose of accomplishing my result and evading my rights.

X Q. 78. All these machines that you made from 1865 to 1870 were constructed as shown in your 1868 patent, were they?

A. I will say that in all the machines that I ever made the vibratable link was either a piece of wood with castings at its ends, as described in a former question, to form its joints, or cast in one piece, without the forked shape, as shown in the '68 patent. The machines of '66 were the only ones made with that forked vibratable link, and I only used the long shackle nut, as shown in the '68 patent, in the single year of 1866. Aside from those differences, there was from year to year, perhaps, slight changes in the mechanical construction for economy or convenience; but mainly they were built in accordance with that patent.

X Q. 79. What did you use instead of the device you have called the long shackle nut, which you say you used only in the year 1866?

A. After 1866 I used the same kind of a joint as I have described as having used in '64, which joint I also used in '65—that is, the joint I used in '64 I used in '65—the snipe-bill joint. You will readily see by referring to the drawings of the '68 patent, at the draft rods, forward end, where it connects with the main frame, the style of joint which I refer to. I made that same joint on both ends of the draft rod, the forward one for the purpose of allowing the rear end of the draft rod to rise and fall and the rear one to permit the finger bar to rock forward and backward, for the purpose of lowering or raising the guard points.

X Q. 80. Did you use the same device in all of those machines for rocking the finger beam by the attendant on the machine?

A. I did in all except the machine of '66, where the arm *l*,
173 as shown in the patent of '68, is constructed to conform to the form of the forked vibratable link; but on those with the wooden vibratable link I made a cast-iron arm extending upward the proper height, which was bolted on the top surface of the vibratable link, and in those machines in which the vibratable link was one continuous piece of cast iron the arm *l* constituted a portion of the same casting—all cast in one mould.

X Q. 81. Was that device on those machines whereby the attendant could rock the finger beam while riding substantially the same as shown in the drawings of your 1868 patent?

A. They were substantially the same.

X Q. 82. There was a hand lever, an arm rigidly attached to the vibratable link, and a stiff rod or bar connecting the lever to the said rigid arm. Was that the construction?

A. Yes, sir.

X Q. 83. And the hand lever was provided with a locking device,

by means of which it was fastened and held in the position to which it might be adjusted, was it not?

A. It was so fastened or held; not rigidly, however. The spaces between the teeth of the casting which held the latch of the lever was sufficiently broad to permit the finger bar to adjust itself to the inequalities of the surface, giving it, if I remember rightly, a capacity to permit the guard points to move upward and downward something like an inch and a half or two inches between the extremes, the lowest and highest of the guard points; and when the guard points were let down below a level for cutting lodged or down grass or grain it was put into a notch forward of the one which carried it at a level in ordinary work. I believe that is all.

X Q. 84. Is this construction of the notches and the locking bolt shown or mentioned in your patent of 1868?

A. I do not know whether it is or not; I could not say;
174 I have not looked at the patent in some considerable time—some years. I presume it may not be so described or shown, as I had no thought of securing a patent upon that feature, for the reasons that such levers and fastenings had been in use longer than I could remember, and I had no idea that I would be able to secure a patent upon it; but I used it as the common property of all to carry out that which was clearly of my own invention, like I used the ground wheel for carrying my machine or imparting power for cutting purposes.

X Q. 85. But if you had found, at the date of applying for this 1868 patent, that it was necessary to the proper working of your machine that the notches in the locking plate should be considerably wider than the locking bolt, so as to give this movement to the points of the guards which you have described, even when the locking bolt was engaged in one of the notches, you would have been likely to have shown and described that important feature of construction, would you not?

A. If I had not known that that style of lever and fastening was about as old as mechanics itself, and had I presumed that I could have obtained a claim upon that lever, latch, and locking plate, undoubtedly I should have had detail drawings made of those parts for the purpose of showing more clearly how that was accomplished; but, as there were a great variety of ways by which that could be accomplished—all old and public property—I selected the one that to me was most suitable and used it without any reference to details.

X Q. 86. Where in mowing machines had you at that time seen this locking device in which the lever was loosely held—that is, the notches were so much larger than the latch as to permit some vibration of the lever?

A. I don't know that I ever saw any with very material
175 difference between the latch and the notch—to permit the latch to drop into the notch readily—on any machine, from the simple fact that at that time there was no other machine built or known having that rocking device, except the Wheeler, and that didn't pretend to have and never did have and was totally incapable of the self-adjustment for conforming to the inequalities of

the surface that my machine possessed, and the lifting levers of, I think, every mowing machine I ever saw had a similar lever and latching apparatus for lifting the bar over obstructions or for supporting it when folded up for transportation.

X Q. 87. But you have just given above as a reason why you did not mention this loose locking arrangement in your 1868 patent that it was a common device. Now you say you don't know of any machine on which it was used. Won't you explain what you mean by these two statements?

A. I haven't stated anything of the kind. I have stated that every mowing machine that I ever saw had a similar locking device for their lifting lever, but none of them, except the Wheeler, had any use for such a lever and device for rocking and rolling the finger bar or permitting it to rock and roll itself.

X Q. 88. I think you are getting this matter still worse mixed. I don't yet understand whether you mean to say that this loose locking device, which would permit some movement of the lever after the latch was engaged in one of the notches, was an old and well-known device or not. Won't you try to answer this one question, Was that an old device at the time you applied for your patent or was it not?

A. The witness states again that it was an old device; that there was no object in any lever for a close, tight fit between the locking bolt and the locking plate; and he further ventures the
176 statement that counsel can't find in the market to-day that mechanism attached to a mowing machine that won't permit of more or less vibration of the lever when the latch is in its proper place for holding the lever in place.

X Q. 89. Where was it old? Please mention the machine.

A. It was old in the Ball. It was old in every machine that run on two wheels and had a hinged finger bar at that time or at this. Many of them, in fact, had but one side which the latch of the lever would hold. The opposite side from the side of strain was of such a form that the lever might be moved in the direction of the lift without raising the latch at all. The only necessity for raising the latch in that style of fastening was when it was desired to let the finger bar down to the ground; then the operator had to raise the latch to let it pass over the teeth on the holding side. In the opposite direction the latch would slide up the succeeding tooth as a common spring door latch slips back when it comes in contact with the other members of the lock.

X Q. 90. Do you mean to say, then, that all that was necessary in your machine was the usual easy fit of the locking latch into the locking notches?

A. No, sir; I do not so wish to state, nor haven't so stated; but what I do wish to state is that no matter how much I might have enlarged that notch it would still be old and unpatentable and only a difference in degree; it didn't constitute novelty.

X Q. 91. Then you did not describe anything in your application for the 1868 patent except what you believed to be new and patentable, I suppose?

A. If my memory serves me rightly, no more particularly than that lever and its fastening are described. I described a ground wheel; showed it in my drawings. I described also a main
177 frame or a gearing carriage and the pole to which the team was attached, and all of which are no more minutely or particularly described than the lever and its fastening under consideration are shown and described.

X Q. 92. But this movement of the latch in the locking device to permit a rocking of the finger beam even when the rocking lever is fastened by the locking latch is an important feature in your machine, is it not?

A. It may be an important feature of an old and well-known character and device, which I had a perfect right to use but no right to claim exclusive property in it.

X Q. 93. You persist in saying that this enlargement of the notches to permit the locking latch to move in them was an old and well-known device, and yet when I ask you to state where you knew it to be old you cannot do so. Now, I ask you again to state where, prior to the application for your 1868 patent, this device in which the latch slid in the notches of the locking plate, as you have stated it must in your machine, was known to you at that time?

A. I will state again that every mowing machine that was ever made that used this style of a fastening for a lever permitted the vibration of the lever handle when acted upon, both before my invention and after. Some of them, as I have stated, permitted a continuous movement of the lever in one direction through its entire scope of movement without raising the latch by the operator. That was a lifting-lever device. As to my own device, which was a rocking lever, there had nothing existed before that time to refer to or to cite as counsel asks for, except in so far as I have mentioned the Wheeler.

X Q. 94. I ask you again why you did not mention in your 1868 patent that it was necessary that some provision should be
178 made for the rocking of the finger beam, even when the rocking lever was fastened in place?

A. For the reasons before stated repeatedly.

X Q. 95. Those are all the reasons that you can give, are they?

A. They are all the reasons that are necessary. I will state again that this was an old device—as old as machinery itself—and while I couldn't patent it by reason of its age I availed myself of the use of it. At the same time I made no claims upon it in the Patent Office, nor I make no claim upon it to-day.

X Q. 96. Well, now, have you stated all of the reasons that you have to give for not mentioning this important feature of construction in your 1868 patent?

A. I think I have stated all that is necessary.

X Q. 97. As a matter of fact, Mr. Graham, your machine would be practically useless without some provision for the rocking of the finger beam independently of the locking of the rocking lever, would it not?

A. No, sir; it would not. Its usefulness, however, would be some-

what impaired by the lack of a controlling capability. Please to allow me to describe. I had various ways and mechanisms in my mind for the accomplishment of this rocking and rolling feature of my finger bar, one of which I will name, which was to extend the arm *l* a little higher and extend it forward to within reach of the driver's foot, so that it might be controlled by his foot and at the same time be left free to vibrate as the finger bar rocked to adjust itself to the inequalities of the surface, and various others that I hardly think worth while to call up and describe in this deposition. This construction named would wholly and entirely obviate the necessity for the lever P and its connections with the arm *l* and its rachet fastening through the intervention of a locking plate with the locking latch. This way suggested would have dispensed with the whole of this matter of which we are now speaking. For some reason that was good to me at that time I preferred the device as shown in the patent.

179 X Q. 98. But this construction of the single lever, which you have just described as one that you had in mind, you would still consider as under your patent, would you—your 1868 patent, I mean?

A. The arm *l* was mine. I made a claim upon it. If I had so extended it, as described in the last answer, within reach of the driver's foot it would still have been the same one single piece. The claim upon it would have been no more and no less than is shown in the claim sued upon.

X Q. 99. Please answer this question: State whether you would consider that construction as within the claim of your 1868 patent which is involved in this suit.

A. I certainly should.

X Q. 100. Your 1867 patent was granted to yourself and W. B. and C. A. Werden as assignees of your interest, was it not?

A. It was.

X Q. 101. What interest did you assign to the Werdens?

A. That assignment was an equal one-third to each of the parties named.

X Q. 102. When was that assignment made?

A. That assignment was made on the 25th day of November, 1865, or within a very few days of that time. I don't like to be too positive of the date of written instruments in the absence of papers.

X Q. 103. State, if you know, when that assignment was recorded in the Patent Office.

A. I do not know as to the exact date, but I think it was filed one of the first days; it was filed between the 25th of November and the 10th of December—I will take those days—1865; and I guess I will state right here that I think that that assignment was what drew my application that I mailed to Munn & Co., Park Row, New York, on February 24th, 1864, from their pigeon-hole and placed it upon the file of the Patent Office about December 5, 1865.

180 To explain: That assignment was immediately forwarded to Munn & Co., in order that that patent, the application for which was then in their hands, might issue to the three parties

named in the title of that patent, and perhaps reminded them of their neglect of my case.

X Q. 104. Then at the time your 1867 patent was issued the two Werdens named were the regular and lawful assignees of two-thirds of your interest in the invention or inventions applied for in the application which resulted in that 1867 patent, were they not?

A. They were under specific and written conditions. Those conditions were that if at any time they should fail to fulfill their part of the contract between them and myself, by which they gained an interest in that patent or invention, by the terms of that contract all of the patents that might have been issued or all of the inventions that I may have made in the interval of time between that assignment and the expiration of the patents granted on my invention they agreed to reassign to me; and by another clause in that contract all of these patents and inventions should revert to me as much as though the assignment or contract had never been written. That contract provided as compensation to me for such assignment that they would in the year 1866 manufacture and sell fifty of said machines, the profits arising therefrom, after deducting the cost of manufacture and all necessary expense, to be divided equally among the three parties named. Instead of building fifty machines that year they built not to exceed ten in time for the sale and harvest of the year 1866. That contract further provided that for the year 1867 and each and every year thereafter during the continuance of that contract they should manufacture at least one hundred of said machines and sell the same, and the net profits arising therefrom
181 should be divided as before, I receiving my one-third of the net profits. In 1867 they failed and refused to build to exceed twenty-five machines, and in the winter of 1866–'7 I made application for the patent now sued on, and about the same time they refused to build the machines their contract called for, but finally did build thirty machines for the harvest of 1868, refusing wholly and entirely to perform their part of the contract. I then, as a matter of humanity and the utmost fairness, notified them in the fall of 1868 that they must for the coming year of 1869 build the machines their contract called for or I should declare that contract null and void, take possession of my property, and proceed as though that never had been written. On that notice they built the one hundred machines called for for the harvest of 1869, but failed to put those machines on the market in a way to sell them, and they had the most of them left on their hands. They then refused to build another machine; refused wholly then to carry out their contract any farther, and I revoked the contract.

X Q. 105. I think you referred somewhere in your direct examination to litigation with the Werdens over this contract. Have you had such litigation?

A. I have had such litigation.

Adjourned till May 4, 1887, at 2 o'clock p. m.

MAY 4TH, 1887.

Said parties met pursuant to adjournment.
Present: As before.

Witness continues his last answer:

I have had such litigation, first, in the replevin suit that I brought to secure my papers in their possession in 1871, as mentioned in my direct examination; then, in 1878 or '79, they attempted to interpose themselves to litigation then being had with the McCormicks, and in that litigation the proofs of all the circumstances and facts and relations of their rights under our contract of No-
182 vember 25, 1865, was fully inquired into and submitted to Judges Drummond and Dyer, sitting in the McCormick case, who found that they had no right by virtue of that contract under the proofs submitted; and some few—two or three—years afterward they brought a suit in chancery against myself and brother before the superior court of Chicago, on the chancery side of that court, praying a specific fulfillment of that contract on my part. That case came to a hearing before Judge Jameson presiding, and was decided in our favor. They appealed that case to the appellate court, at Chicago. That court sustained the findings of Judge Jameson in our favor. They then appealed that case to the supreme court of the State, and the supreme court confirmed the findings of the appellate court. That case is reported in vol. 107 of Illinois Reports, as I am informed. In June, 1871, I brought suit against them in the circuit court of Lake county, Illinois, on the chancery side thereof, on this same contract of November 25, 1865, by which they were entitled or had the color of title to anything in the way of patents or inventions properly belonging to me. I believe this constitutes the facts as to litigation between us on that subject.

Answer objected to as parol evidence of matters of record.

X Q. 106. Then is all litigation between you and the Werdens terminated?

A. It is, so far as the contract of November 25, 1865, is concerned, or any other contract or claim as to all the patents that have ever been issued to me or to me and them jointly.

The witness here states that he desires to correct a portion of his answer to X Q. 41, and says as follows:

What I wish to correct relates to the levers and their fasten-
183 ings. I stated in my answer that the lever was a grooved casting with a wooden handle, with a chain attached to the vibratable link, and passing around the groove for the purpose of lifting the finger bar, and held in place by the common ratchet fastening and locking bolt. If I recollect rightly, I stated that the other two levers which I have described were held in a like manner. Those features were of 1864 instead of 1863. In my '63 machine my lifting lever was pivoted at its proper point and constructed eccentrically from the pivot upon which it turned. This eccentric bore down on the forward end of an intermediate piece, which was

pivoted properly to the rear end of the main frame. To the rear end of this intermediate piece was attached a short chain, dropping down and connecting to the vibratable link near the shoe. As to the fastenings, this lever was held by a straight ratchet, by the side of which the lever handle moved when being operated. The fastenings for the other two levers spoken of were of wrought iron, bent in a circular form, with holes through them at proper intervals for the end of a hook upon the lower end of a handle for actuating it, which was fastened to the lever at the proper place. I will say, however, that all this occurred some twenty-four years ago this present season, and, perhaps, with so many different changes from year to year, and having given this part of the subject no thought, neither have I examined the patent of 1867 for years, I think it is not strange that I made that simple mistake. I believe that is all on that subject.

Redirect examination by Mr. BANNING:

R. D. Q. 107. How has all the litigation which you have referred to between you and the Werdens been decided whenever it has proceeded to the point of decision?

A. Invariably in our favor; and I wish to state in addi-
184 tion that they undertook to interpose themselves into the case known as the Geneva Lake Crawford Manufacturing Company suit, tried in the United States circuit court, at Milwaukee, in 1879 and '80, in which case Judge Dyer decided, with the proofs before him, that they had no right or interest in the patent of 1868.

R. D. Q. 108. Look at this certified copy of a contract purporting to be dated November 25, 1865, and to be signed by yourself and W. B. Werden and C. A. Werden, and state whether it appears to be a copy of the same contract which you have been referring to in your cross-examination.

A. It is a copy of the contract that I have mentioned in this deposition.

Counsel for complainants offers said certified copy of said contract in evidence, the certificate thereto being dated October 30, 1879, and signed by H. E. Paine, Commissioner of Patents.

R. D. Q. 109. How was Mr. Cleveland informed with reference to your invention before or at the time his contract with you was entered into?

A. Mr. Cleveland came to me through a Mr. Waterman, who was an acquaintance of us both, and Mr. Waterman knew something of my invention in 1863, and he thought I had a pretty good thing. Mr. Waterman brought us together, and I told Mr. Cleveland clearly the facts of my siege of the year previous, 1863, and that I had full confidence in my ability to make what is ordinarily called a perfect machine on another trail, and with Mr. Waterman's assistance the contract spoken of was entered into. I also believe that Mr. Cleveland conferred with Porter Brothers in relation to it.

R. D. Q. 110. Referring to your answers to cross-questions 52 and 53, what did you mean as to the other manufacturer therein referred to?

185 A. I meant that with all their experience, their capital, their facilities, and their force of mechanics in that department of industry they built the largest number of a new machine, never having been previously made, and I meant to be understood that if under those conditions they should make such a notorious failure mechanically I might be excused in not making a perfect machine under the conditions that I have named as being mine at that time; I might be excused for making a failure of the machine two years earlier. As to the sale of those machines, the name of that firm was so celebrated that the farmer would take his goods almost without a suggestion of a warranty; but in this particular machine, when the farmer got it into his field, it was as great a failure as my machine of 1863.

R. D. Q. 111. As I understand your statements on cross-examination, the assignment to the Werdens which you spoke of was made subject to all the conditions of the agreement of November 25, 1865, above offered in evidence. Is this correct?

Question objected to, as the assignment itself or a certified copy of the record thereof in the Patent Office is the best evidence.

A. It is correct. There was a clause in that contract that none of the parties to these patents could dispose of any portion, shop or territorial rights, in any way except by the written consent of all the parties to such title or contract.

Answer objected to as parol testimony of a matter of record.

R. D. Q. 112. Were the conditions and agreements of that contract carried out and performed or not?

A. They were not.

R. D. Q. 113. How long since anything has been done

186 under that contract?

A. There has nothing been done under that contract since the last of August or first of September, 1869.

R. D. Q. 114. Was proof taken in the McCormick and Geneva Lake Company cases in reference to the rights or supposed rights of the Werdens in the patent in suit acquired or claimed to have been acquired by virtue of said contract and the assignment to the Werdens made pursuant to the provisions thereof? If so, to what extent?

Question objected to, as the court has decided, on formal motion by complainant, that the testimony in the McCormick case cannot be introduced as evidence in the present cause. The attempt to prove the record in the McCormick case by parol is therefore irregular and unwarranted.

A. There was such proof taken on the Werdens' behalf. W. B. and C. A. Werden were fully examined on the part of the defense,

and on the part of the complainant the present witness in this case, a Mr. J. B. Welch, and S. I. Bradbury.

Answer objected to for the same reason and notice of motion to strike out.

Recross-examination by Mr. THACHER:

R. X Q. 115. You never have had litigation over your 1867 patent, have you?

A. Yes, sir; I have.

ALVARO B. GRAHAM.

JOHN F. FULLEN, a witness produced, sworn, and examined on the part of complainants, deposes and testifies as follows in answer to questions by Mr. BANNING:

187 Q. 1. State your name, age, occupation, and place of residence.

A. John F. Fullen is my name; 55 years old; I live at No. 588 Hurlbert St., Chicago; I am a manufacturer of harvest machinery; not specially employed now, but until recently with the Beck and Hopkins Manufacturing Company of Chicago.

Q. 2. State what experience you have had in manufacturing harvest machinery.

A. I have followed it as a business for the last thirty-three years, and for twenty years of that time I was with C. H. McCormick Brothers. That was from 1854 to 1874.

Q. 3. In what particular capacity were you so engaged with McCormicks, and what did you have to do with experimenting on or building new styles of machines?

A. My capacity was that of a foreman in the general manufacturing and experimenting and assisting in getting up all new improvements.

Q. 4. State what you ever had to do, if anything, in getting up different mowers in which the finger bar had a rocking or tilting motion, and whether or not it was an easy work to get up and perfect such machines, giving fully any facts you may know in reference to difficulties encountered, different kinds of machines experimented on, and so forth.

Objected to as irrelevant, immaterial. The questions relate to a machine not in this case. Counsel for defendant states that, in view of the change counsel for complainant has made in the question by drawing his pen through certain portions, he now withdraws the above objection, as it no longer appears pertinent.

A. I had charge of the work and did the fitting up of the machines that we had made. I might have said directed the making of our experimental machines. I said our—that means McCormick's experimental machines—and found it a very difficult job, and took a great deal of work and patience to do what we set out to do in making those tilting machines. There is

188

a great deal of difficulty in getting up any new machine, and all of them—it takes, from my experience—it takes from one to three years to put a machine into the market and get it perfected so that it is a proper machine to put into the market. That has reference to all harvesting machines.

Q. 5. In what ways was the rocking of the finger bar first accomplished, so far as you know?

A. I only know from my own experience, and that we rocked with a lever in the shoe held by a casting on the main frame to any height you saw fit to cut, the lever reaching forward alongside of the seat of the operator, so that he could handle it in driving along.

Q. 6. In that construction was the finger bar or cutting apparatus attached rigidly to the main frame or not?

A. No; it swung independent of the main frame.

Q. 7. Was it attached by supplemental frame, or how?

A. It was attached by brace rods reaching across the rear end of the frame, the outer end fastening to the outer corner of the frame.

Q. 8. Which machine was that and when was it manufactured?

A. It is a machine gotten up by Mr. L. J. McCormick and manufactured in 1865.

Q. 9. Did that machine have two wooden frames or not?

A. No, sir.

Q. 10. How long did they manufacture that machine before adopting their two-frame machine?

A. It was only manufactured one season; the next season the two-frame machine came out.

Q. 11. Did that first machine which you refer to as having been made in 1865 prove a success or a failure?

A. It was a failure.

189 Q. 12. How was the rocking or tilting of the finger bar accomplished in the two-frame machine which you say they began manufacturing the next season?

A. The rear end of the shoe was fastened by a swivel joint to the frame, while the front end was left free to be operated by the lever, to tilt it or raise it up or down in the operation of the machine.

Q. 13. As I understand you, that attachment of the shoe was made directly to the under or supplemental frame. Is this correct?

A. Yes; it was all attached to the under frame.

Q. 14. Was the rocking or tilting accomplished by means of this supplemental frame or not?

A. The supplementary frame was hinged on the main shaft, allowing the rear end on which the cutter bar was fastened to float over the unevenness of the ground, while the front end of it could be raised with a lever which was attached to the shoe and run up within reach of the operator and held by a ratchet casting on the main frame, and in any position he saw fit to leave it—any height he wished to cut.

Q. 15. How large or heavy was that supplemental frame?

A. It was about equal in size to the main frame of the machine.

Q. 16. How much did it cost to build it; or, in other words, how

much did the use of that supplemental frame add to the cost of manufacture per machine, say, over what would have been the cost of a machine otherwise equally good, but made without such supplemental frame?

A. The expense was some more, but I am not able to say just how much, but not a great deal.

Q. 17. As near as you can approximate it, was it one dollar or several dollars per machine?

A. Oh, it would probably cost a dollar more. I don't think any more than that.

190 Q. 18. How did that two-frame machine prove, as compared with the frame machine "New Advance" mower or one subsequently manufactured by McCormicks, so far as regards the rocking or tilting of the cutting apparatus?

A. The supplementary frame machine was a perfect success and it done as good work as the later machine, but the "Newer Advance" was gotten up for less cost.

Q. 19. Then was or was not that "New Advance" a real advance over that two-frame machine?

A. Yes; it was a cheaper machine and gotten up in finer style. I had not much experience with the "New Advance" or the later one you speak of.

Q. 20. Do you remember how long it took McCormick to get out that two-frame machine, and whether or not it required considerable experimenting?

A. It was experimented with in 1866. In 1867 it was put upon the market and worked successfully. I might have said a few were put upon the market in 1866. They gave satisfaction; worked well.

Q. 21. What facilities did McCormicks have at that time for experimenting and building new machines?

A. Good.

Q. 22. They were among the largest manufacturers in the country, were they not?

A. I think so. They were considered so.

Counsel for defendant states that he has waited until the direct examination of this witness was completed without entering objection to see if anything would appear to make the testimony of this witness relevant. Counsel for defendant now enters objection to the entire deposition of the witness as wholly irrelevant and immaterial and gives notice of motion to strike the same from the record.

JOHN F. FULLEN.

191 Testimony taken on the part of the complainants before Sidney W. Petrie, notary public, at his office, in Little Falls, N. Y., May 11th, 1887.

Present: Ephraim Banning, Esq., of counsel for complainants, and H. H. Talcott, Esq., representing Messrs. Coburn & Thacher, counsel for defendants.

DAVID H. BURRELL, a witness produced, sworn, and examined on

the part of complainants, deposes and testifies as follows in answer to questions by Mr. BANNING:

Q. 1. State your name, age, occupation, and place of residence.

A. David H. Burrell; forty-six years of age; occupation, merchant, and place of residence, Little Falls, Herkimer county, State of New York.

Q. 2. Are you in any way connected with or interested in the Warrior Mower Company of Little Falls, N. Y.; and, if so, in what way?

A. Yes; stockholder and director.

Q. 3. Were you acquainted with Frank Bramer, late of Little Falls, N. Y., and many years ago of Fabius, N. Y., in his lifetime?

A. Yes; I knew him for about twelve or fifteen years before his death, which occurred in 1883, I think.

Q. 4. Was he the Frank Bramer who had various letters patent relating to mowers issued, say, in 1865 and afterwards?

A. Yes.

Q. 5. Was Frank Bramer above referred to at any time connected with the Warrior Mower Company of Little Falls, N. Y.; if so, when and in what way?

A. Yes; during the entire term of my acquaintance with him; as a director and general manager of the company.

Q. 6. Do you know Alvaro B. Graham, of Chicago, Ill., one of the complainants in this cause?

A. Yes.

192 Q. 7. If you ever had any business transactions with Mr. Graham will you be kind enough to state when and what they were?

Defendants' counsel objects to this question as immaterial.

A. Yes; in 1881 Frank Bramer requested me to go to Chicago to try and effect a settlement with Graham, who had brought suit against the Warrior Mower Company for the infringement of a patent belonging to him. I refused to go on the ground that I was not even a stockholder in the company and had no interest in its affairs. At a subsequent meeting I gave my consent to go to Chicago, and he instructed me what to do. I had an interview with Mr. Graham in Chicago in July, 1881, which led to a settlement in the August following.

Defendants' counsel objects to the answer as irrelevant and immaterial, and will ask the court at the hearing of this cause that the same be stricken out.

Q. 8. As I understand you, you were not a stockholder or director in the Warrior Mower Company at the time of this settlement. Have you become such since, and were any of your relatives interested in the company at that time?

A. Yes; I became a stockholder after the settlement, and was then elected a director. Judge Loomis, my father-in-law, was the president of the Warrior Mower Company from the time of its organization until his death, in the fall of 1885.

Q. 9. Was the Warrior Mower Company operating or manufacturing as a licensee under Frank Bramer's patents at the time of your settlement with Mr. Graham, above mentioned?

A. Yes.

Q. 10. In what way?

A. By the payment of a royalty on each machine manufactured.

193 Defendants' counsel objects to this answer and question on the ground that the witness is incompetent to testify, as he has just stated that he was not a director or stockholder in the company; therefore his testimony must be hearsay; and on the further ground that the license is the best evidence of the contract between the parties.

Q. 11. State what information or means of information you had in 1881 in reference to Frank Bramer's relations to the Warrior Mower Company and in reference to said company's connection with the Graham settlement, above mentioned.

A. I received my information from Frank Bramer, and was governed by his explicit directions in making the settlement. Bramer had shown me his contracts with the Warrior Mower Company. He was recognized as the general manager of the company, and had control of it absolutely.

Q. 12. Please state fully everything that passed between you and Frank Bramer in reference to the Graham matter or anything connected therewith, and particularly as to any claim on Bramer's part to have made the Graham inventions or as to his ability to defend against the Graham patent.

Objected to by defendants' counsel as leading and immaterial, and for the further reason that the said Frank Bramer is dead, and any statements made by the witness as to the said Bramer's conversation with him are incompetent.

A. Bramer directed me to accomplish a settlement. I asked him how much I should pay. He replied, I want you to settle for $10,000 to $12,000, if possible; but go to $18,000 or $20,000, if you can't do it for less. I asked him if his counsel advised settlement. He replied, We want it got out of the way. I said, Suppose we cannot settle for less than $24,000 or $25,000, then what? He
194 replied, Communicate with me by telegraph. I said, Bramer, what is the matter; do you throw up the sponge?—or words to that effect. What business have you to make such a settlement as this if your patents are valid? He replied, I want you to go out there and settle it; that is all there is about it. In accordance with or as a result of this conversation I entered upon negotiations with Graham and effected a settlement upon the payment of twelve thousand dollars. The claim against the Warrior Mower Company was assigned to me and the Warrior Mower Company reimbursed me, paying the twelve thousand dollars, of which amount Frank Bramer paid six thousand dollars individually.

Q. 13. Do you remember whether Bramer said anything in any of those conversations about his being able to prove or not being

able to prove his own inventions back of Graham's? If anything was said on this point, please state the same fully.

Defendants' counsel objects to this question for the reasons given in the objections to the last answer, and for the further reason that it is grossly leading, and because the witness had professed even to have stated all the conversations between himself and Bramer upon this subject which led up to a settlement between Graham and the Warrior Mower Company, the evident purpose of counsel in repeating this question being to indicate to the witness what he wants him to swear to.

A. I recall with reference to this point that he said that his witnesses might be mistaken as to dates.

Q. 14. Are you familiar with Frank Bramer's handwriting?

Objected to by defendants' counsel as immaterial.

A. I was familiar with it during his lifetime.

195 Q. 15. Please look at this letter written on the letter paper of the Warrior Mower Company, dated at Little Falls, N. Y., October 20th, 1879, addressed to Banning & Banning, and signed by Frank Bramer, which has been already offered in evidence in this cause as Complainants' Exhibit Bramer's Letter, and state whether it and the signature to it are in Frank Bramer's handwriting.

Defendants' counsel objects to the question and to the witness answering the same, because the witness has not shown himself competent.

A. Yes; I believe said letter to be in Frank Bramer's handwriting and the signature to it to be his signature.

Cross-examination of DAVID H. BURRELL by Mr. TALCOTT, defendants' counsel:

X Q. 1. What time was it that you effected this settlement between Graham and the Warrior Mower Company?

A. In the fore part of August, 1881.

X Q. 2. At that time you were not and never had been a stockholder, officer, employee, or agent of said company, had you?

A. No; except as to some specific work which they sometimes called upon me to do.

X Q. 3. What work was that and who called upon you to do it?

A. I do not recall; sometimes by Judge Loomis, my father-in-law, who was the president of the company, and sometimes by Bramer, but nothing of special importance until this settlement was made by me.

X Q. 4. And you were not in any way related to Bramer or any of his family, were you?

A. No, sir.

X Q. 5. And you never had any business connection with him as a partner or associate in business up to that time?

A. No, sir.

196 X Q. 6. But you were a son-in-law of the president of the company, and therefore interested in his business affairs, were you not?

A. Yes; in the sense of looking out for his general best interests.

X Q. 7. How old a man was Mr. Loomis, your father-in-law, at the time this settlement was made with Graham?

A. Eighty-one or eighty-two years old.

X Q. 8. How much money had Mr. Loomis invested in this Warrior mower enterprise?

A. Over twenty-five thousand dollars; I can't tell exactly; it might have been over $30,000.

X Q. 9. This sum, whatever it was, was cash, was it not?

A. Part was cash and part was stock dividends.

X Q. 10. What was the capital stock of the company?

A. About one hundred and sixty-two thousand dollars.

X Q. 11. When was the Warrior Mower Company organized?

A. In 1868 or 1869, I believe.

X Q. 12. Had Frank Bramer any property except his patents when the company was organized?

A. Yes; he had personal property which he sold to the company, such as machines and tools for the manufacture of mowers and other agricultural implements, and he subscribed and paid for quite a large block of the stock of the company. I cannot tell you what the value of his personal property was.

X Q. 13. Do you think it was one thousand dollars?

A. Yes; it was more than that; it was several thousand dollars.

X Q. 14. How many thousand dollars? Give your best judgment.

A. From six to eight thousand, probably.

X Q. 15. Did he have any money to speak of at that time?

A. No, sir; I think not.

197 X Q. 16. Your father-in-law and some others aside from Bramer put the money into the concern, didn't they, at the time of the organization?

A. Bramer put in, in cash, the proceeds of the machinery and tools which he brought from Fabius to Little Falls, the company issuing stock to him of the Warrior Mower Company for whatever amount the said machinery and tools were taken at, and Judge Loomis and the other subscribers to the stock furnished the balance of the capital.

X Q. 17. The company was organized to make mowers or harvesters under Bramer's patents, and among said patents was one No. 51546, dated Dec. 19th, 1865, a copy of which I show you, marked "Defendants' Exhibit Bramer 1865 Patent."

A. The company was organized to manufacture, sell, and deal in agricultural implements, and they secured a license from Bramer, under the patent referred to, to manufacture and sell mowing machines, as I believe.

X Q. 18. And Bramer had, prior to the organization of this company in 1868, been manufacturing for several years mowing machines, under this same letters patent No. 51546, at Fabius, New York?

A. I understood that he was engaged in the manufacture of mowers before he came to Little Falls, but do not know for how long a time.

X Q. 19. Now, at the time that you made this settlement with Graham, Graham had brought a suit for infringement of the Graham patent against the Warrior Mower Company, had he not?

A. Yes, sir.

X Q. 20. And you understood that the patent upon which this suit had been brought had been sustained by the United States circuit court, did you not?

A. No; I don't think Bramer told me about that if he knew it.

198 X Q. 21. Well, what did he say about the suit against them—what was it for?

A. He made no explanation other than that already stated; simply wanted me to go to Chicago and effect a settlement.

X Q. 22. Settlement of what?

A. Settlement of the Graham suit against the Warrior Mower Company.

X Q. 23. What did he say that this suit was about?

A. He said that Graham claimed that the Warrior Mower Company had infringed his patent on all machines the Warrior Mower Company had manufactured for the rocking cutter bar.

X Q. 24. When did he make this statement to you?

A. I should think in the month of July, 1881, upon the occasion of his first asking me to go to Chicago.

X Q. 25. How long was it between the first interview and the second interview you had upon this subject?

A. Only a few days.

X Q. 26. You hadn't in the meantime, or at any time before you went to Chicago on this business, had any talk with your father-in-law, the president of the company, upon this subject?

A. Yes. I told him that Bramer had requested me to go to Chicago for that purpose.

X Q. 27. I suppose your father-in-law didn't know anything about the matter and didn't express any anxiety upon the subject of a settlement?

A. He said he would take no responsibility whatever; that it was Bramer's business entirely; that we were paying him a royalty on the mowers the Warrior Mower Company were making, and that Bramer must take care of us.

X Q. 28. How was it that Bramer went to you anyway to do this business?

A. I didn't know then and I don't know now. I presume he thought I would make a settlement if I set about it. I re-

199 member he said that his relations with Graham were such that he couldn't approach him when I urged him to go himself. Bramer impressed me with the belief that the suit with Graham had better be compromised and settled, and I admit that, as the directors and stockholders, as well as the president, were my personal friends, I felt that it was best to make the settlement for

Q. 5. Did you ever do work for him on a mowing machine?

A. I did.

Q. 6. Were you in his employ at the time he built his first mowing machine?

A. I was.

Question and answer objected to by defendants' counsel on the ground that it assumes that witness knows when Bramer built his first mowing machine without any proof that such is the fact.

Q. 7. Please state when and where Frank Bramer built his first mowing machine; what, if anything, you had to do in connection therewith, and briefly all you know about it.

A. In the haying season of 1863 we repaired Mr. Orsemus Hills' mowing machine, and Frank spoke and said he thought they were a pretty good machine. I think it was the Pine machine. Frank said he could get a job making them machines, but he didn't like them because they were a stiff finger bar. I said, Frank, why don't you get up a machine of your own; you are smart enough, or ought to be, anyway. He said, I have been thinking of that very thing myself. I don't know as anything more was said at that
203 time. After Orsemus Hills got through his haying Frank Bramer and I took his horse and one-horse lumber wagon and went down and got the machine, to Orsemus Hills', and took it up to Bramer's shop, into the shop; took it to pieces and used the wheels to set up a new machine with. We made patterns—got castings for a tub gearing. We went to work and put a machine together, odd spells. We done custom work—sometimes worked at it an hour and sometimes longer. After we got it done we tried it in Corbin's lot; also in Albert Bramer's lot. I couldn't state the exact time this machine was built; it was in the fall of 1863, after the haying season; it was in the "after-feed" we tried it in—that is, the second growth of the grass. It was built in the town of Fabius, Onondaga county, N. Y., in the old shop that Bramer worked in, in 1863.

Q. 8. How do you know that was the first mowing machine built by Frank Bramer?

A. By conversations we had at that time, as I have stated before.

Q. 9. Look at this copy of the Frank Bramer patent of Dec. 19, 1865, No. 51546, marked "Defendant's Exhibit Bramer's 1865 Patent," which I now hand you, and state whether its drawings show in general outline a machine like the one built by Frank Bramer in the fall of 1863, as you have above stated. I do not ask whether it shows the same construction in details or in all its parts, but simply whether this patent shows a machine of the same general style or kind in construction as the one first built, above referred to?

A. The plan is the same.

Q. 10. What makes you remember that that first machine built by Frank Bramer was not built until the fall of 1863?

A. I did not work for Frank Bramer until after I came home from the army. My family were living at Delphi, N. Y.,
204 from 1862 to the spring of 1863. I enlisted in August, 1862;

came home the latter part of December, 1862. The first work I done after I came home was for Frank Bramer, in the spring of 1863.

Q. 11. State what company and regiment you were in and the dates of your enlistment and discharge.

Question objected to by counsel for defendants because the evidence is not the best evidence of the facts sought to be proved, the date of the enlistment and discharge being matters of record.

Counsel for complainants suggests that his only object in asking the question is to give the defendants an opportunity to look up the witness, to test the truthfulness of his statements, if they so desire.

A. I enlisted in the 149th Regiment, Co. E, N. Y. Vols., August 29th, 1862; discharged December 22, 1862.

Q. 12. Were you away from here—say from this county—during all the time you were in the army?

A. Yes, sir; or from the time we left Syracuse, about a week from the time of my enlistment, until my discharge.

Q. 13. Have you ever talked with Frank Bramer about this first machine above referred to or made any affidavit for him in relation thereto since he left Fabius? If so, please state all that has ever passed between you on this subject, giving dates, places, etc.

Counsel for defendants objects to this question because Frank Bramer is dead and unable to answer the witness' testimony, and because such evidence is incompetent and immaterial.

A. I don't know as I can give the dates now without referring to something. The same week previous to Graham's being here Frank Bramer came here to the shop—wait a little—I could get dates.

205 Witness asks to leave the stand to go to his house to get dates, which is consented to by counsel. The witness after returning states:

In February, 1881, Frank Bramer came to the shop and called me upstairs. We went into the upper part of the shop. He says to me, Them Western men will be down to get my affidavit in regard to the year he built his first mowing machine. He says, Don't let them know; don't say anything about it. Says he, I want to make it appear that I built my first machine in 1862. Well, then Graham came some time in the same month; I can't tell the exact day. It was in February, 1881. I gave him an affidavit; went with him and got one of Charles Downs; got one of James Furlong, the man who was with me all of the time I was in the army. He, Frank Bramer, has been at my house since I lived here and talked with me when I lived in the Button house. That was after I gave Graham the affidavit. He wanted to know what I stated in the affidavit I gave Graham and what year I claimed it was we set up the first machine. I told him in 1863. He said he was sorry I done that, and went out.

Q. 14. Another part of my question was whether you ever made

any affidavit for Frank Bramer in reference to this first machine we are talking about; and, if so, when that was and all about it.

Counsel for defendants objects to this question for the reason given as to the previous question and for the further reason that the affidavit should be produced and identified before being testified about.

A. I did. I can't tell the exact date when it was now. It was previous to this other quite a good while; don't know how many years. I stated in that that he built the first machine in the fall of 1862. I never looked at my dates and believed that to be so until Graham came down here and told him so. I told him I
206 thought it was in 1862. I went home and looked my books over; went up and saw Owen Vincent, the man I worked for in the spring of 1861; got his old account book to see the date I worked for him; went down into the cemetery and looked at the grave-stone I put up for my little girl who died in 1861. I then went to the house and got my discharge; found out I enlisted in the fall of 1862. I then came up to Ira Smith's hotel; saw Mr. Graham; told him that it was in 1863 instead of 1862 that I worked for Bramer.

Q. 15. When Mr. Bramer came to you for an affidavit or at any other time did he say anything about your having worked with him on his first machine or not?

Counsel for defendants objects to the question as incompetent.

A. He said he wanted to get my affidavit in regard to the year he built his first mowing machine. He had this affidavit drawn up. I looked it over and signed it, and was sworn to it.

Q. 16. To refresh your recollection I will state that in the latter part of October, 1879, Frank Bramer showed me an affidavit executed by you about that time or very shortly before. Please think the matter over and give us your best recollection as to when your affidavit above referred to, made at the instance of Bramer, was executed.

Counsel for defendants objects to this statement and question as highly improper and unfair to defendants and as grossly leading and suggestive to witness; that the witness has been repeatedly asked to fix the date and state conversations; that he has retired from the stand for the purpose of obtaining dates; that the question of dates is the only point of the witness' testimony that is
207 material; that the witness should be allowed to fix his own dates, and not have the complainants' counsel fix the dates for him.

A. It was after he went to the Falls; I can't give the exact date. He came to the shop; we were very busy; I came over to the justice office and swore to it; I have no means of getting the date.

Q. 17. Have you your discharge from the army here with you; or, if not, where is it?

A. It is in Washington; I can get it, though; I sent it on pension business.

Q. 18. Do you have any other papers here with you or in your possession showing the dates of your enlistment in the army and discharge therefrom?

A. I have a furlough which shows it, and which I here produce. I came home on the furlough between the 10th and the 22nd of December, 1862, and my discharge was sent to me shortly afterwards.

Counsel for complainants offers said furlough in evidence, and a copy of the same, which it is agreed may be used in place of the original, is hereto attached, marked "Complainants' Exhibit Way's Furlough."

Witness cross-examined on the part of defendants by Mr. TALCOTT:

X Q. 1. You say in your answer to question 14 that you believed that you helped Bramer in 1862 until Graham came down here. When was it Graham came down here?

A. February, 1881.

X Q. 2. Did Graham pay or offer to pay you $100 if you would testify in his favor?

A. No, sir.

X Q. 3. What did he say he would pay you and what was he to pay you for?

A. He said if I would get him the affidavits I told him I
208 could get, to substantiate the dates I gave him when this first mowing machine was built, he would pay me well for it. There was no amount agreed on.

X Q. 4. Haven't you stated that Mr. Graham had agreed to give you $100 for testifying in this case or for making an affidavit changing the date from the date of an affidavit in which you had previously sworn that Bramer made his invention in 1862?

A. No, sir; he never asked me to make an affidavit in that shape.

X Q. 5. What kind of shape did he ask you to make an affidavit in?

A. When I found out the dates I showed them to him and showed him my discharge. I gave him an affidavit of the facts just as they were after I showed him this discharge and other papers I had. I knew by them papers and discharge that I couldn't have worked for Frank Bramer in the year 1862, because I never worked for him until after I came home from the army, and Graham asked me if I would give him an affidavit to that effect, and I told him I would.

X Q. 6. How much did he agree to pay you for this affidavit?

A. Not one cent.

X Q. 7. Did he after he got back to his home send you a draft for $25.00?

A. Yes; a draft or money. He wrote me if I would get and send your (pointing to Mr. Charles Downs) affidavit and Mr. James Furlong's affidavit he would send me $25.00. I got them and sent them on to him, and he sent me the money.

X Q. 8. Haven't you stated, in substance, that you were going to

have $100 for testifying in this case, and you wouldn't testify unless you had $75.00 more, and that Graham had only sent you $25.00?

A. Part of that is true and part ain't. The $25.00 is true—I presume I told somebody of that—but I never told that I was to have $100 for testifying for him. He never made me no
209 offer for my own affidavit, but said if I would get him these other two affidavits and send to him he would pay me well for it. He took mine home with him before he wrote back for these other two.

X Q. 9. Have you ever stated to Lewis Bramer or Ira Smith that you wouldn't testify in this cause until you had been paid the balance of the $100.00 Graham had agreed to pay you, or did you state that in substance to them?

A. I think I told them they wouldn't get any more affidavits until they had paid what he agreed to for what they had had.

X Q. 10. How long were you in the army fighting for your country?

A. I was in the army about three months.

X Q. 11. In what part of the country were you during these three months? State where you were and what you did.

A. I was in Washington about a month when I first went out; went from there to Frederick City at the time McClellan and Stonewall Jackson had their fight; from there I went to Sandy Hook—Pleasant Valley; from there to Harper's Ferry; in November I went into Harper's Ferry hospital.

X Q. 12. Were you ever in any engagement, or were you wounded in the service of your country?

A. No, sir.

X Q. 13. What made you leave the service after three months perilous and arduous duties?

A. On account of my health. At the time we left Washington we left our blankets, shelter tents, overcoats, and we went down the valley without anything to protect us, and a great many were taken sick from exposure.

X Q. 14. You got well immediately after your return home, or at least began to grow better?

A. I went to work the next spring. I didn't get well im-
210 mediately. I only weighed 90 lbs. when I got home, and I have never seen a well day since.

X Q. 15. How much did you weigh immediately before you went into the army?

A. Just before I left Syracuse I weighed 160 lbs.

X Q. 16. What is your business, and what was it before you went into the army?

A. Blacksmithing.

X Q. 17. Where did you work in 1862?

A. Delphi; I enlisted at Delphi.

X Q. 18. How far is Delphi from Fabius?

A. Five miles.

X Q. 19. When did you first become acquainted with Frank Bramer?

A. Over thirty years ago.

X Q. 20. Were you ever in Frank Bramer's in 1862?

A. No, sir; I think not.

X Q. 21. When did you first go to work for Bramer, and where did you live at that time?

A. I was living at Delphi when I hired out to him; I commenced work for him in the spring of 1863.

X Q. 22. Where did Albert Bramer live at that time?

A. On his farm, in Fabius.

X Q. 23. Of whom did Albert Bramer's family consist at that time?

A. I think he had three children, two boys and one girl.

X Q. 24. Albert Bramer's wife died previous to your going to work for Frank Bramer, did she not?

A. I think she died before, but am not positive.

X Q. 25. And Albert married his second wife the next fall or winter after you went to work for Frank Bramer, did he not?

A. I can't tell; I can't bring it to mind now; don't remember who his second wife was.

X Q. 26. How long did you work for Frank Bramer after you first commenced to work for him?

A. The first time, most two years.

211 X Q. 27. Of whom did Frank Bramer's family consist at the time you commenced work for him?

A. Himself and wife and some hired men.

X Q. 28. Where did you say Albert Bramer lived when you first went to work for Frank Bramer?

A. I think he lived on his farm—now called the Harry Lewis farm—about ½ mile from the shop; guess it ain't ½ mile.

X Q. 29. When did you say the machine made in 1863 was completed?

A. After haying; can't tell the exact month.

X Q. 30. When and where was it first tested?

A. In Corbin's lot and Albert Bramer's lot.

X Q. 31. Whose team was used when this test was made in Albert Bramer's lot, and who drove the team?

A. I am not positive whose team, but think it was Albert Bramer's team, and Albert Bramer drove it.

X Q. 32. What time of year was this test made; was it cold or warm weather?

A. I can't tell.

X Q. 33. Was the grass frozen?

A. No, sir.

X Q. 34. What condition was the grass as to growth and greenness?

A. That on Corbin's was not very large; don't remember as to Bramer's; can't tell as to greenness. I was looking at the machine more than at the grass.

X Q. 35. But the grass hadn't been frozen, had it?

A. I couldn't say.

X Q. 36. Was it very early or late in the fall?

A. I think it was in August or September; might have been a

little later, but don't think it was. I have no means of knowing. It was the fall mowing; don't know when that was; my impression is that it was rather late; they had to run after castings.

X Q. 37. Now, I want you to know something about this
212 matter, if you haven't made up your mind you won't know anything about it, and I wish you would state whether this test was made on Bramer's place before or after cold, freezing weather had set in?

A. I can't tell whether it was or not; I have no means of remembering.

X Q. 38. Who was present at the time this test was made? I mean both tests. Give full names of all parties.

A. Frank Bramer, Albert Bramer, Orsemus Stillman, I think, and a string of boys. There was quite a crowd of outsiders. I think the notary was one. Orsemus Stillman worked for Frank Bramer at that time. I don't know where Orsemus Stillman is now.

X Q. 39. Do you know a man, who lived in Homer at that time, who married a sister of Albert Bramer?

A. I never knew him, but think his name was Penoyer.

X Q. 40. How many tests of this machine did you make that fall and winter?

A. I don't recollect of any more that I went with, except in Corbin's and Bramer's lots; I don't think of any more.

X Q. 41. How did the machine work at these tests; was it satisfactory or otherwise?

A. It worked very well; don't think it was satisfactory to Bramer, as he made alterations afterwards.

X Q. 42. Then you never was present when Bramer tested the machine in cold weather with frozen grass and when there was present at the test Frank and Albert Bramer, their father, and a brother-in-law, and two boys, children of Albert Bramer, and when the machine didn't work satisfactorily, were you?

A. I was only present at the two times mentioned before. I presume they were, as there was quite a number there. They naturally would be, but I can't tell.

213 X Q. 43. I mean to ask you if you were present at a trial of this machine in cold, freezing weather, when the parties above referred to were present and when the trial proved unsatisfactory.

A. I don't recollect about that; I couldn't be any more definite than I have been.

X Q. 44. You have stated that you were not in Frank Bramer's shop in 1862; you therefore don't know anything about what Frank Bramer built in his shop in 1862 and in the early winter of 1863?

A. Not until the spring of 1863.

X Q. 45. You have stated that you have made an affidavit in which you swore that Frank Bramer built his first machine in 1862. What made you swear to this?

A. I thought it was so until I found out my mistake.

X Q. 46. What made you think so?

A. He said it was so, and I thought it was so until I looked up the dates and records and found out it was not so.

Redirect examination by Mr. BANNING:

Q. 1. I will ask the notary to read to you question 12 and cross-question 2 of Albert Bramer's deposition, taken by the defendants in this cause, with Mr. Bramer's answers thereto, as the same appear in a copy of said deposition which I have just borrowed from the defendants' counsel here in this room, and ask you whether you recognize therein the machine which you have been testifying about and referring to as the first mower made by Frank Bramer.

Counsel for defendants objects to this question as improper, and because the testimony is not authentic and there is no means of ascertaining whether it is authentic or not; and copy was not loaned counsel for any such purpose.

214 Counsel for the complainants replies that he considers the simple fact that the copy of the deposition referred to came from the defendants' counsel a satisfactory and sufficient authentication; but in view of the above objection he now withdraws the question.

Q. 2. Have you been paid anything whatever for giving your testimony in this cause?

A. No, sir.

Q. 3. Has Mr. Graham ever promised to pay you or said anything about paying you one cent except for your actual work and trouble in connection with his matters?

A. No, sir; he has not.

Recross-examination by Mr. TALCOTT:

X Q. 1. You may describe, minutely and in detail, the machine made by Mr. Bramer, as you say, with your assistance, in 1863, and state particularly the means by which the finger bar was attached to the machine.

A. The first was a snipe bill looped into the left-hand side of the front end of the frame; then there was a rear brace that was fastened onto the main brace by means of a round iron loop that lay over the front side of the main brace. That loop was to give a tilting or rolling motion to the cutter bar.

X Q. 2. Is this what you call a minute and particular description of the machine built by Mr. Bramer in 1863? If such is the fact I have no more questions to ask.

A. There was a joint where the cutter bar came onto the main brace; the gearing was a tub gearing, two drive wheels, levers to throw out and in gear, seat and springs, pole and whiffletrees, cutter bar and knife.

X Q. 3. Is that all?

A. That is all I think of now.

X Q. 4. Was there a device by which the finger bar received a rocking or rolling motion in this machine?

A. There was.

215 X Q. 5. State what such devices were and how they imparted this rocking motion to this finger bar, and if there was anything to prevent the finger bar turning down below the level so they would not run in the ground; state what such devices were.

A. The rear brace passing over the main brace into this iron loop and bent in such a manner as to strike the main brace before the guard points would run into the ground.

Redirect examination by Mr. BANNING:

Q. 1. What was done with this first machine made by Frank Bramer in 1863, and did he afterwards manufacture others of the same general style, which might perhaps have been considered as the outgrowth of his first efforts in mowing machinery?

A. I don't know what was done with it, but he went right on the next year and built a good many machines. I worked for him two years; was gone one; came back and worked for him until he went to Little Falls and went there with him, and he was building mowing machines all that time.

GEO. W. WAY.

CHARLES A. DOWNS, a witness produced, sworn, and examined on the part of the complainants, deposes and testifies as follows in answer to questions by Mr. BANNING:

Q. 1. State your name, age, residence, and occupation.

A. Charles A. Downs; 72 years of age; residence, Pompey, N. Y.; occupation, I have been a farmer and a blacksmith, but am now too old to work.

Q. 2. Did you ever work as a blacksmith for Frank Bramer, at Fabius, N. Y.?

A. I did.

Q. 3. When and for how long?

A. I worked there in the winter of 1861 and 1862, and I also worked there in the fall of 1862 and 1863.

216 Q. 4. Do you remember when you began to work for Frank Bramer in the fall of 1862?

A. I can't tell, but think it was in September; it was early in the fall that I commenced.

Q. 5. Did you continue working there from that time on until after George W. Way entered Frank Bramer's employ as a blacksmith?

A. George came there when I quit; he took my place at that time.

Q. 6. That is, you went out and Way came in about the same time, if I understand you?

A. Yes.

Q. 7. When was that?

A. That was in the spring of 1863, or about that time, I think.

Q. 8. Did Frank Bramer ever build any mowing machine while you were in his employ, before George W. Way came there?

A. I think not.

Q. 9. Did you ever see or know of any work being done on one at his shop before that time?

A. I don't recollect that I did.

Q. 10. If he had been building or making any mowing machine there at that time would you have known of it?

A. I should have known of it, of course, for I was the only blacksmith working there at that time.

Cross-examination by Mr. TALCOTT:

X Q. 1. Where did you work in the fall of 1866?

A. I worked on a farm I bought up in Pompey.

X Q. 2. When did you buy this farm?

A. I bought it in 1865, I think.

X Q. 3. Where did you work in the spring and fall of 1864?

A. On a little place I owned north of Fabius.

X Q. 4. Where did you work in 1860?

A. I bought the place north of Fabius in 1860.

217 X Q. 5. When did you move on that place?

A. April 1st, 1860.

X Q. 6. How long did you live there?

A. Five years.

X Q. 7. Where did you work during that time?

A. I worked there, with the exception of the time I worked for Bramer. I had a blacksmith shop on my place.

X Q. 8. Did you work in the blacksmith shop on your place?

A. Part of the time I did; I worked in shop and on farm.

X Q. 9. Did you do work in the blacksmith shop on your farm at odd jobs, at intervals, when Bramer didn't have work for you to do?

A. I worked for Bramer in the winters of 1861 and 1862. I went down in the morning and came back at night. My shop was closed while I worked for Bramer.

X Q. 10. How did you work for Bramer?

A. By the hour.

X Q. 11. Have you any books showing your account with Bramer?

A. I have not. He paid me every Saturday night, and that was the end of it. I kept no account whatever with him.

X Q. 12. Then, if I understand you right, you worked on your farm and in your shop in the summer, and in the winter you worked for Bramer?

A. I did for two winters. I worked a day or two for Bramer in the summer of 1863.

X Q. 13. Do you remember when Frank Bramer's daughter was born?

A. I do not.

X Q. 14. Do you remember if Frank Bramer had a daughter?

A. I do not; I was never in his house.

X Q. 15. Do you know Albert Bramer?

A. I do.

X Q. 16. Do you know when Albert Bramer's first wife died?

A. I do not; don't remember.

218 X Q. 17. Where did Albert Bramer live in 1862?

A. About ½ mile north of Fabius.

X Q. 18. How long did Albert Bramer live on that farm?

A. I think he lived there until Frank went to Little Falls; but I wouldn't be positive.

X Q. 19. When did Frank Bramer go to Little Falls?

A. That I can't tell you, either.

CHARLES A. DOWNS.

COMPLAINANTS' EXHIBIT WAY'S FURLOUGH.

To all whom it may concern:

The bearer hereof, Geo. W. Way, a private of Captain Ira P. Seymour's company, 149 Regiment of N. Y. S. V., aged 26 years, 5 feet 6 inches high, light complexion, brown eyes, dark hair, and by profession a blacksmith; born in the town of Tully, and enlisted at Syracuse, in the State of New York, on the 25th day of Aug., eighteen hundred and sixty-two, to serve for a period of three —, is hereby permitted to go to Pompey, in the county of Onondaga, State of New York, he having received a furlough from the 10th day of December, 1862, to the 30th day of December, 1862, at which period he will rejoin his company or regiment at Bolivar Heights, Va., or wherever it then may be, or be considered a deserter.

Subsistence has been furnished to said Geo. W. Way to the 10th day of December, 1862, and pay to the day of both, inclusive.

Given under my hand, at camp on Bolivar Heights, Va., this 9th day of December, 1862.

A. G. COOK,
Maj. Com'd'g 149th Reg't N. Y. V.

W. 73. Application for furlough, private Geo. W. Way, Co. E., 149th N. Y. V.

219 Headquarters 149th N. Y. V., Nov. 27, 1862. Approved and respectfully forwarded. J. C. Lane, l't col. com'd'g 149th N. Y. S. V.

Approved and respectfully forwarded. Geo. G. Green, brg. g'l com'd'g 3d brigade, 2d div., 12 corps.

Headquarters 2d division, November 28, 1862. Respectfully forwarded approved. Jno. W. Geary, brig. gen. com'd'g division.

Headquarters 12 corps, Nov. 28, 1862. Respectfully forwarded approved for twenty days. H. W. Slocum, maj. gen. vols. com'g.

Headquarters Army of the Potomac, camp near Falmouth, Va., Dec. 2, 1862. Approved for 20 days. By command of Major Gen'l Burnside. Lewis Richmond, ass't adj't gen'l.

A true copy of furlough and all of the endorsements thereon.
Dated Fabius, N. Y., May 13, 1887.

C. H. WHEATON,
Notary Public.

Testimony taken on the part of the complainants before Howard P. Denison, notary public, at the place of business of Charles Garlick, No. 33 West Onondaga Street, Syracuse, N. Y., May 13, 1887.

Present: Ephraim Banning, of counsel for complainants, and H. H. Talcott, representing Messrs. Coburn & Thacher, counsel for defendants.

CHARLES GARLICK, a witness produced, sworn, and examined on part of complainants, deposes and testifies as follows in answer to questions by Mr. BANNING:

Q. 1. Please state your name, age, residence, and occupation.
A. Charles Garlick; 56 years; Syracuse, N. Y.; mechanic.

220 Counsel for defendants objects to the taking of the testimony of this witness, because it is taken in the place which is the workshop of the witness and is entirely without any conveniences for taking testimony, in the room surrounded with workmen and not in the office of the building, without any chairs or desk, and an evident attempt on part of complainants to choke off any cross-examination because of the extraordinary unfit places in which the testimony is taken, the counsel having to stand up during the taking of the testimony, there being no chairs in the room to sit in.

Counsel for complainants replies, without admitting the statements above made, several of which are grossly exaggerated, that he is willing to have the examination adjourned to the office of the building if the defendants' counsel so desires, and requests an answer to this offer.

Counsel for complainants further states that his only reason for taking the deposition at this place is that the witness, being a busy man, has declined to leave his business to go elsewhere for such purpose, it being necessary, as he states, for him to be here to look after matters and to answer any calls that may be made. In addition to this counsel for complainants calls attention to the fact that witnesses have heretofore been examined in this cause in more inconvenient places than this large light room, which is 90 feet long and 20 feet wide and in which there are no workmen engaged, except at the farther end—that is, the end most distant from where the examination is taking place.

Counsel for defendants declines to make any answer.

Q. 2. Were you ever in the employ of C. C. Bradley & Son, of Syracuse, N. Y.; if so, when and in what capacity and what business were they engaged in at that time?

221 A. I was. In 1861 I entered their employment. I was with them till 1866, I think—during 1866. In 1862 I reorganized their shipping department and had charge of that during 1862–'3. In 1864 I took the road as one of their general agents. I acted in that capacity during the balance of my time with them. At that time and during those years they were manufacturing "Hubbard mowers;" that was their special business; some jobbing and foundry work connected with it.

Q. 3. Do you remember of their ever attempting to manufacture a front-cut mower?

A. I do.

Q. 4. When was that, as near as you can remember?

A. To the best of my recollection they commenced in the fall of 1863 and completed during the winter of 1863 and spring of 1864 one thousand forward-bar mowers, front-cut, as you call them.

Q. 5. Look at this model which I now show you, marked "Defendants' Exhibit Model of Bradley 1863 Front-Cut Mower," and state whether you recognize it as representing the forward-bar mowers referred to in your last answer.

A. It is the same as the model which I carried in the field to sell the machines from.

Q. 6. Please describe how these machines were intended to operate in actual use in the field and particularly the position of the frame and finger bar.

A. The action of the finger bar was what we termed the flexible bar, working freely up and down at the outer end in order to pass freely over rising grounds, dead furrows, and on even surfaces, and followed them; worked freely. The position of the frame in all cases in operating was to be level and what was in those days termed the "level-frame machine," the rear end of the pole being hung upon coupling irons to enable adjusting the frame to different sized teams,

as it was necessary for the proper operation of the machine
222 that the frame should be level.

Q. 7. Was the finger bar intended to have any rocking motion when the machine was in actual use or not?

A. The machine was never calculated for what is termed the wabbling bar. There was a device attached to the rear end of the shoe for the purpose of raising the points of the guards, for the purpose of protecting the cutters or knives in cutting over stony grounds, as the machine originally was intended more particularly for the New England mountains, which were very stony as a rule.

Q. 8. Were the finger guards ever intended to be in any way tipped or rocked downward or not?

A. They were not—never so intended; neither would the construction of the machine allow any such depression of the points of the guards below a level.

Q. 9. Then was this machine intended or adapted for the cutting of lodged or fallen grain or grass any more, say, than an ordinary rigid-bar machine?

A. It was not. The only advantage which we had was the thin bars which we used, which put us as close to the ground with a level guard as it could be safely used; and therefore we were enabled at that time to cut such grass better than the ordinary mowers on account of their using carrying wheels and thicker bars.

Q. 10. How was the slotted lug at the back of the shoe secured or intended to be used in actual work in the field?

A. The slotted lug was attached to the heel of the shoe which extended up under the push bar, the lug passing up at the outer side of the push bar, which took a bolt passing through the push bar

and slot of the lug, with a nut clamping against the lug, the outer surface of the lug being corrugated for the purpose of preventing the nut from slipping and to hold the finger bar rigid at the point where it was set.

223 Q. 11. The outer surface of the lug of the model, "Defendants' Exhibit Model of Bradley 1863 Front-Cut Mower," does not appear to be corrugated as described in your last answer. How were the full-sized machines in this respect?

A. In the large-sized machine they were light depressions of about $\frac{1}{16}$ of an inch, which gave it sharp surface for the purpose of preventing the lug slipping under the nut when in operation.

Q. 12. Was this true of all the full-sized machines, of the kind mentioned, manufactured by C. C. Bradley & Sons?

A. They were all made alike; there was no difference in them.

Q. 13. Then, if I understand you correctly, the position of this lug was never changed except when the operator desired to change the line of cut, in which case he would unscrew or loosen the bolt, adjust the lug to the desired position, and then screw up or tighten the nut, after which the finger bar was held rigidly in its new position and not allowed to wabble up or down. Is all this correct or not?

Counsel for defendants objects to this question as leading and incompetent, as it states the proposition which the counsel is desirous of having the witness consent to.

A. That is all correct. In all cases in operating the machine the intention was to set the bar or guards in any position above the level desired, and there set it firmly in its place, to remain rigidly during its operation.

Q. 14. Would it have been practical to have used the machine otherwise—that is to say, to have loosened the nut so that it would not have held the lug close or tight against the side of the push bar?

A. It would not have been practical, for you could not have done practical work with it, and it would have been directly in
224 opposition to the intention of the builders or the advice of the general agents to their local agents in the field.

Cross-examination by H. H. TALCOTT:

Counsel for defendants has inspected the so-called office counsel for complainants so kindly tendered for use, and states that it is more unfit to take testimony in than the work-bench at which the testimony is being taken, and that the same is not used for an office; that it is dirty and without chairs of any kind or any facilities whatever for taking testimony.

X Q. 1. What was the nature of your employment with the Bradleys before you went out on the road?

A. I had general charge of the setting up of all of the machines and of the shipping.

X Q. 2. Did you construct, as a mechanic, or did you direct the

construction of the different mowers constructed by Bradley in 1862, '3, '4? I mean the mowers substantially like the model exhibit about which you have testified.

A. In 1863 the putting together, adjusting, and preparing for the market of the machines all passed under my inspection, and I was in charge of the mechanics who did the work on them.

X Q. 3. What do you mean by being in charge of the mechanics? Do you mean you paid and had charge of overseeing them in respect to keeping them at work?

A. I mean that I was the manager of that department, to see that every machine was properly constructed, properly fitted for the field. The orders for shipment were all passed under my hands and the general business of that department entirely under my control and with the authority to discharge any incompetent operator.

X Q. 4. You were a sort of a general shipping clerk and overseer of the establishment, were you not?

225 A. My department combined two departments—the receiving the machines when they were set upon their wheels, inspecting them, and having charge of the mechanics who fitted up the cutting apparatus and applied them to the machine, when they were again inspected and passed to the painter. After going through his department they were returned to my department and were under my control and care until delivered for shipment.

X Q. 5. Did you design, draft, or originate the front-cut machines which you say were substantially like the "Defendants' Exhibit Model of Bradley 1863 Front-Cut Mower," made by Bradley & Son during the years you have stated?

A. No, sir; I did not; don't think that there was any drawings or designs ever made.

X Q. 6. Whose idea was this manufacture of machines substantially like this model—by Bradley & Son?

A. The machine was originally gotten up to fill the call or demand of the local agents in certain locations and through a portion of the general agents, and we always gave M. G. Hubbard as the originator, and it was always termed the "Hubbard forward bar."

X Q. 7. I mean who in Bradley & Son's establishment determined that the company should enter upon its manufacture? Was it C. C. Bradley?

A. I don't know whether it was C. C. Bradley or Mr. Bonney, the book-keeper. It would generally be supposed that it would be C. C. Bradley, Sr., and C. C. Bradley, Jr., who would decide in regard to the manufacturing, as they were then the heads of the company.

X Q. 8. How do you know that this device that connects the push bar with the rear end of the shoe—I refer particularly to the slot and nut—was constructed in this manner only for the purposes you have stated in your deposition?

226 A. By being a mechanic. That knowledge demonstrates the fact that it cannot be any other way. Besides having been a practical operator in the field and operating the machine under all conditions and circumstances—that experience has taught me that it would not practically operate in any other form or man-

ner, and knowing the views of the manufacturers at that time of its construction and sale I know that that was their minds at that time.

X Q. 9. I wish you would give some other reasons for your positions than what other people thought, and ask you what would be the practical effects of loosening this nut that I have referred to so as to allow the bolt to play up and down in the slot. What would be the effect upon the finger bar passing over rough ground? Give your reason for any opinion you may express.

A. The effect upon the finger bar in passing over rough or uneven ground would be the same, whether wabbling or the points of the guards being raised above the level and being held rigid; but in one case with that machine, and under tests in my own and my agent's hands, the work with the loose bar was very unsatisfactory and imperfect. In my former reply I gave the reasons as my own which cover this question, merely adding thereto what I knew to be the views of the manufacturers at that time.

X Q. 10. I understand you to say the loosening of this nut so as to allow the play of the bolt as I have stated would tend to impart a wabbling motion to the finger bar, did you not?

A. It would leave the bar free, wabbling up and down, and especially upward to such a degree as to elevate the cutter bar to such a height that the finger bar would ride down the grass, cutting, in many cases, the mere tops, and throw the cutter bar into such a position that they would fill up, clog the guards, and pull off
227 instead of cutting off the grass, leaving very imperfect work and condemn the machine.

X Q. 11. Do you know Mr. Romyn Hamblin?

A. I have known Mr. Hamblin for a great many years.

X Q. 12. What was his position in Bradley & Son's in 1863 and 1864, and what is it now?

A. In 1863 and 1864 he was pattern-maker in their works—Bradley & Son's works. For the last two or three years I do not know what he is a doing.

X Q. 13. Was he a skilled workman at that time as a pattern-maker?

A. I so considered him, but had not practical experience either in building or operating the machines.

X Q. 14. You don't know whether Mr. Hamblin ever tested one of the machines in Wisconsin in 1865 or not?

A. I do not, but to the best of my recollection Mr. Hamblin never operated in the West until after 1867.

X Q. 15. You have spoken about the intention for which certain devices on this model were made—that is, the device to which I have just called your attention was intended to be used as you have testified. Now, isn't it the fact that when Mr. Bradley and his son determined to make a forward-cut machine that they thought "it was necessary to have a bar that would oscillate on boggy ground," and that they supposed that this slot and the devices connected with it was one of the means by which this bar could be oscillated?

A. As I stated in the former reply, the machine was originally intended for the New England mountains, and this device was

intended to elevate the points of the guards in passing over stony grounds and the bogs of the salt marshes adjoining the coast—not for free oscillation in general use, for the reason, as I have said before,
228 when allowed to go free it would elevate or turn up the forward edge of the finger bar to such a degree that it would ride upon and press down the uncut grass before the sections to such a degree — the cutting became very irregular—guards would clog and the working — impracticable.

X Q. 16. When do you say these machines were first made—what year?

A. To the best of my recollection, it was in the fall of 1863; completed in spring of 1864.

X Q. 17. Don't you remember they constructed a few machines in the winter of 1862–'3 or spring of 1863 for the harvest of 1863, and that they shipped one of said machines to L. Belden, of Cleveland, Ohio, in September, 1863?

A. I have no recollection of any forward-bar machines being on the floor or being constructed during the winter of 1862 or summer of 1863, and if any such machine was made, in my opinion, it was a sample machine to perfect the patterns; but, if so, to my knowledge, it was not shipped away, as I have no recollection of any shipments of a forward-bar machine while the shipping department was under my care, which was until spring of 1864.

X Q. 18. Suppose that on the shipper's receipt book this endorsement should be made by Mr. Bonney, the clerk: "M. G. Hubbard, forward bar M," what would that indicate?

A. It would simply indicate that Mr. Bonney had personally shipped a machine without passing it through the shipping department. The words "M. G. Hubbard" would seem to indicate the shipment of a machine to M. G. Hubbard, the "forward bar M" that it would be a forward-bar mower, and it might have been a model or possibly a sample machine which had been constructed to perfect the pattern.

At this point the witness is shown and reads Mr. Bradley's
229 answer to Q. 10 in his deposition taken in this cause Nov. 19, 1885, after which he states:

From this reply or answer of Mr. Bradley's I should feel that this was not shipped as a forward-bar machine, which it most certainly would have been had the machine been shipped through the shipping department, and the designating the machine as a smaller mower would seem to mean the model, as there was but one-sized mower made at that time, although there might have been such a shipment made of the forward-bar machine during that fall. If it was shipped through the regular channels of shipment the receipt upon its face would have shown whether a forward or rear bar, as I personally made every shipping bill during that year myself.

Redirect examination by Mr. BANNING:

R. D. Q. 1. In some of your answers, as, for instance, to cross-

questions 9 and 10, you have spoken of a wabbling motion of the finger bar. What do you mean by this?

A. Simply to play up and down at will.

R. D. Q. 2. Do you mean down below the level or simply within limits above the level of the cutter bar when in its normal position?

A. I mean within limits above the level. It never went below the level at all.

CHARLES GARLICK.

Testimony taken on the part of the complainants, before George C. Cook, notary public, at the office of Messrs. Banning & Banning, Chicago, May 23, 1887.

Present: Ephraim Banning, Esq., of counsel for complainants, and H. H. Talcott, Esq., representing Messrs. Coburn & Thacher, of counsel for defendants.

230 PETER SEYL, a witness produced, sworn, and examined on the part of complainants, deposes and testifies as follows in answer to questions by Mr. BANNING:

Q. 1. State your name, age, residence, and occupation.

A. Peter Seyl; thirty-eight years; Chicago, Illinois; model-maker; proprietor of the Chicago Model Works.

Q. 2. Are you accustomed to make models of patented inventions or from patent drawings; and, if so, how much experience have you had in this kind of work?

A. I have made models for the last twenty years; have made them from the specifications, copies of patents, and from drawings, and so on, and I consider myself very familiar with this kind of work.

Q. 3. Please look at this model which I now hand you, marked "Zug model No. 4," and state what you know about it, what it represents, etc.

A. It represents a part of a reaper. I looked over the specification of the Zug patent No. 25697, dated October 4, 1859, and I have made on the model the hinge exactly as shown in said patent, marked No. 16 in figure 1 of the drawings.

Q. 4. Does that model correctly and exactly represent the form of attachment of the link Y to the frame at the point designated 16 in figure 1 of the drawings of said Zug patent No. 25697—that is, does it exactly and correctly represent the joint used to attach the rear or inner end of the link Y to the frame?

A. It does represent the same in the model as in the patent exactly.

Q. 5. Does the connection of the link to the frame and cutting apparatus in this model provide for and permit all the motions of the finger bar specified or contemplated in said Zug patent?

231 A. I did not read over the specification of that patent carefully, but the way the joint is on this model the finger bar can only work up and down, and also can be folded over.

Q. 6. Please read the patent carefully and state whether or not these are all the movements of the finger bar which it contemplates or provides for.

A. I have read the patent carefully and find a claim in there only to fold the finger bar. They also claim in said patent a box, P, with gum-elastic spring in order to have the sickle bar to yield, which I think is impossible for it to do in the way bar Y is hinged at 16 in the patent.

Q. 7. Do you find in this patent any intimation whatever that the finger bar can be tipped or rocked?

A. I do not.

Q. 8. Would the construction as shown and described in that patent permit of any tipping or rocking of the finger bar or not?

A. It would not the way it shows and describes it in said patent.

Q. 9. Does this model which you have been speaking about as Zug model No. 4 also correctly represent the manner of attaching the finger bar and draft bar to the intermediate link by which the finger bar is secured to the frame?

A. As far as it is made it shows the same as in the drawing of said patent.

Counsel for complainants offers said model in evidence, and the same is marked "Complainants' Exhibit Zug Model No. 4."

Counsel for defendants objects to the introduction of this exhibit as improperly authenticated and incorrect.

Q. 10. State again whether or not this model, "Complainants' Exhibit Zug Model No. 4," correctly represents the manner of attaching the cutting apparatus, draft bar, and intermediate link by which the cutting apparatus is secured to the frame, and whether it
232 shows all the parts necessary for making such attachments as described in the patent.

A. It represents all the parts exactly the same as in the patent, with the exception of a spring, *v*, on bar Y, which is not shown in the model or necessary to be shown for the purpose of illustrating the manner of attachment.

Q. 11. Please look at this other model which I now show you, and which has been offered in evidence in this cause as "Defendants' Exhibit Zug Model" and state whether or not it correctly represents the construction shown and described in said Zug patent of October 4, 1859, No. 25697.

A. I find that the bar Y in this model is hinged wrong at 16; that it is just reversed from what it shows in the drawing of said patent. The pin should run right parallel with the drive wheel, while this is at right angles to it.

Cross-examination by Mr. TALCOTT:

X Q. 12. Do you claim to be an expert in patent matters—that is, are you able or have you given such attention to patent matters that you are able to understand the scope of patents upon reading them over?

A. I do, as I have done that very often before this.

X Q. 13. You said that you had not read the specification of this Zug patent. How, then, and upon what authority did you make this model that you offer? Did some one tell you how to make it?

A. I did not make the model. I have only made a change on the model, which was the hinge at No. 16 in the specification and drawings.

X Q. 14. What change did you make of the hinge at 16? How was it that you found it and how came you to make this change?

A. All the change I made was—I have moved the pin 16
233 up a little higher, which they had before right in the center of band 9.

X Q. 15. How do you know that hinge 16 on bar Y is wrong in the defendant's model, and that the pin should run parallel to the line of draft instead of at right angles? What authority do you find for this statement in the patent? Please read or point out in the specification any authority you have for assuming that your construction is correct.

A. I do not find anything in the specification saying how the pin run—which way—but the drawings show it running with the draft of the machine.

X Q. 16. Then your opinion is simply founded on your understanding of the drawings and not from anything found in the specification or claims of the Zug patent, is it?

A. Yes, sir; because I cannot find anything to describe it in the specification how pin 16 should be inserted.

X Q. 17. But you do find in said patent devices which will give a yielding motion to the sickle bar, do you?

A. I find that they claim such a device in said patent, a spring in box P, and if the bar Y was hinged different from what it is in said patent it would yield, but cannot yield the way it shows.

X Q. 18. But if the bar Y was hinged in the manner shown in the defendant's model, then such devices will permit of this yielding motion, will they not?

A. Yes.

Redirect examination by Mr. BANNING:

R. D. Q. 19. Does not the attachment at the forward end of the draft bar in this model, "Complainants' Exhibit Zug Model No. 4," permit of a slight yielding when the guards come in contact with any obstacle while operating?

A. It does, just a little, especially if there is some lost mo-
234 tion in hinge No. 16. In the model also it shows just a little yielding on the sickle bar if you press against same.

R. D. Q. 20. Then, assuming this to be the yielding motion contemplated by the patent, if the bar Y is hinged in the manner shown in the "Complainants' Exhibit Zug Model No. 4," does not the construction permit said yielding motion?

A. Yes; that is all the yielding motion you can get out of it, and they claim in said specification.

R. D. Q. 21. Then, if this model correctly represents the construction described in the patent, such construction may have the yielding motion referred to?

A. Yes, sir.

R. D. Q. 22. Please look at your answer to X Q. 17, then, and state what you had in mind when you there said that the bar "cannot yield in the way it shows."

A. Because it is not a practical way of constructing anything of that kind.

R. D. Q. 23. Referring to your answer to X Q. 18, does the Zug patent authorize or suggest any change in the construction or manner of attaching the parts for the purpose of obtaining or increasing said yielding motion?

A. No; I cannot find anything else in the specification of said patent.

PETER SEYL.

Adjourned till May 24, 1887, at 10 o'clock a. m.

MAY 24.

Said parties met pursuant to adjournment.

Present: As before.

ALVARO B. GRAHAM, recalled, deposes and testifies as follows in answer to questions by Mr. BANNING:

Q. 1. You have asked to be recalled in this cause, have you not?

A. I have asked to be recalled on my own motion.

235 Q. 2. State for what purpose.

A. For the purpose of explaining my answers to cross-question 56. In my answer I stated that I considered them completed at the close of the harvest of 1865—say first of August I considered it completed and perfected in all of its details. The correction that I wish to make is this: That I considered my machine mechanically perfected at that time, as I had before stated, a successful machine, but I considered my invention, so far as invention was concerned, as completed in the harvest of 1863. When I answered that question originally I had my mind on the mechanical efforts that I had made during these years spoken of—1863 and 1865—instead of the inventional branch of the subject.

Cross-examination by counsel for defendants:

X Q. 1. But I understand you to have testified that all the machines constructed by you in 1863, and also all in 1864, were failures—that is, they were inoperative. Have you not?

A. If I have so stated, it is a mistake. I have stated that these machines were very imperfect mechanically, but not inoperative. I have stated that they were operative, but for the want of experience and facilities for the making of a machine of that character they were, mechanically speaking, very imperfect. I am now speaking of the machines of 1863. Then for the reasons before stated the machines of 1864 I done but very little with them that year—the

year 1864; but I will say also that they were mechanically very imperfect.

X Q. 2. You state in your direct examination and in answer to question 4 by Mr. Banning as follows: "Under the Cleveland arrangement we undertook, in 1864, to build, I think, fifteen machines, and completed, I think, some ten or twelve of them. The first one of these machines that we tried or tested we tried on
236 the farm of George Stearns, in the town of Warren, Lake county, Illinois. This machine proved a signal failure, and that was the extent of my personal experimenting that season." You testified as I have stated, did you not?

A. I give the reasons in that answer why the machine was a signal failure, that reason being that Mr. Cleveland assumed mechanical control of the work, and they were so unmechanically constructed that it was an impossibility for them to work successfully. As to the movements, adjustments of my invention, there was no difficulty in that year.

X Q. 3. How many machines did you construct in 1863 and for the harvest of 1863?

A. My recollection is that we about completed five machines. I think that we very foolishly commenced something like twenty-five, and I think of those five that we had nearly completed we got two into the field—what we might call practical farmer's work—one in the hands of Mr. Ichabod Bull. This was abandoned by ourselves and Mr. Bull, I think, within the first day or two—that is, our efforts were abandoned to make it work, Mr. Bull becoming impatient, and we quit our efforts on that one and went to work on the farm of Richard Dooley. With this machine we experimented and run it during the entire grass and grain harvest—during that portion of the time that we were able to keep it together. As I have stated in a long answer that I gave in the direct, we had various difficulties to overcome—mechanical difficulties. If counsel desires, I will repeat that experience.

X Q. 4. With what result did you run this machine on the farm of Richard Dooley?

A. With such result as uniformly attends such experiments. This class of machines have always been considered very
237 difficult machines to perfect, mechanically, and requires a great deal of effort.

X Q. 5. Why did Mr. Bull abandon this machine within a day or two and go to Waukegan to buy another machine, as you testified? It was because your machine was a failure, was it not?

A. It was because it was a failure mechanically. It was not a failure in its movements or adjustments, yet the self-adjustment of the finger bar was not exactly what I wanted, but what I did want was contained in the invention embodied in that machine; but as to its self-adjustment the parts were not properly located to give me the desired result.

Redirect examination by Mr. BANNING:

R. D. Q. 1. Did you ever work for Porter Brothers, of Waukegan, on anything else than on your mowing machines in question?

A. Never.

R. D. Q. 2. Then if their books contain entries of payments to you, what do such entries relate to?

A. They relate to my wages while at work on these machines spoken of in my former answer in the year 1863; they cannot relate to anything else.

ALVARO B. GRAHAM.

WILLIAM H. HUBBARD, a witness produced, sworn, and examined on the part of the complainants, deposes and testifies as follows in answer to questions by Mr. BANNING:

Q. 1. State your name, age, residence, and occupation.

A. William H. Hubbard; age, sixty-four; residence, South Evanston, Illinois; occupation, I am a merchant having a store in Chicago.

Q. 2. Were you ever in the employ of C. C. Bradley & Son,
238 of Syracuse, N. Y.? If so, when and in what capacity, and what business were they engaged in at that time?

A. I was with them in the capacity of general agent from the fall of 1859 to the fall of 1866. They were engaged in the manufacture of reapers and mowers.

Q. 3. What did you have to do as general agent with their reapers and mowers?

A. I appointed their agents, organized the territory, and made the collections; had the full charge of the sale of machines.

Q. 4. Did your duties or work require you to become personally familiar with the construction and operation of their machines?

A. Yes, sir.

Q. 5. Do you remember of C. C. Bradley & Son ever attempting a front-cut mower?

A. Yes, sir.

Q. 6. When was that, according to your best recollection?

A. The first machine I saw, I think, was in the fall of 1863. They were manufactured and put in use in the spring of 1864.

Q. 7. By whom was that machine gotten up?

A. M. G. Hubbard, a cousin of mine.

Q. 8. Did you know about it at the time M. G. Hubbard got it up?

A. Yes, sir.

Q. 9. Did you know his purpose and object and also the purpose and object of Bradley & Sons in its manufacture, particularly to the movements of its finger bar?

A. Yes, sir.

Q. 10. Please look at this model which I now hand you and which has been heretofore offered in evidence in this cause as "Defendants' Exhibit Model of Bradley 1863 Front-Cut Mower," and state whether or not you recognize it as representing generally at

least the front-cut mower manufactured by Bradley & Son and referred to in your previous answers.

A. I do so recognize it.

239 Q. 11. Please describe how those front-cut mowers of which this purports to be a model were intended to operate in actual use in the field and particularly the position of the frame and finger bar.

A. In the first place, there is a joint at the back end of the tongue, which allows it to be adjusted to the different heights of horses, so that in actual use the body of the machine will remain level, neither pitching forward nor backward. Then it is adjusted in such a manner that the cutter bar rises and falls in traversing uneven surfaces, adapting itself to uneven surfaces. The height of cut is regulated by a corrugated slotted iron, that allows it to be adjusted to different heights of cut. As, for instance, if you want to cut very low that is brought close to the bar and secured. That gives a low cut. That set down in this way. When moved farthest away it cuts the highest; it rolls back on the outer shoe, and the edges of the knives — up, which gives it a high cut. When nearest the bar it gives its lowest cut.

Q. 12. How is the cutter bar adapted to different surfaces of the ground—by means of the parts which permitted it to rise and fall?

A. Yes, sir.

Q. 13. And how was the position of the cutter bar adjusted so as to make it cut stubble of different height?

A. That is by this corrugated slotted lug. If more than that amount is needed the height of cut is regulated by the operator with this lifting lever, throwing it over obstacles, stumps, stones, etc.

Q. 14. In practical operation in the field were those front-cut machines manufactured by C. C. Bradley & Son intended to be used with the lug loose, or how were they to be used in this respect?

A. The intention in operating was to set that at the height that a person would wish to cut their grass. Most every farmer
240 wants a uniform height; some want it cut closer than others. This machine would cut very close at its lowest cut, or it would cut about three inches and a half at its highest cut, and leave the stubble smooth and nice.

Q. 15. After the height of cut was determined and the cutter bar set accordingly, how was it allowed to operate—was the lug allowed to remain loose, so that the cutter bar could wabble up and down or not?

A. Never in my use; I always set it to the height I wanted to cut. If the grass was lodged I always set it to cut low; if not, I set it to cut about two inches high.

Q. 16. Was the lug ever intended to be loose while the machine was being used, and what was the intention of the inventor and manufacturers in this respect and the instructions given to agents and farmers?

Defendant's counsel objects to a part of the question referring to the intent of the inventor and manufacturers, which is not competent.

A. The instructions given to farmers and agents was to set the machine to the height of cut they wanted, and then secure this lug to keep it in that position. If allowed to go loose the tendency of the bar would be to cut low where you didn't want it to cut low, and to cut high, perhaps, where you wanted to cut low. In other words, the cut would not be uniform. If a farmer was allowed to use a machine with the bar, say in that way, the grass would be cut, dipped in and out, and wouldn't be satisfactory. That is why we instructed them to set the knives at the height they wanted to cut. The intention was, as I say, to secure this and regulate the height of cut by it. We always carried a wrench in the tool box, so that we could reach over there and give the nut a turn.

Q. 17. But what I want to get at specifically is whether,
241 when the knives were once set in any desired position, the nut was then screwed up so as to hold the side of the slotted lug tight against the push bar, and thus to always hold the bar rigid in any position in which it was set. Was this the case or not?

A. It was.

Q. 18. And the cutter bar was never allowed or intended to be allowed to remain loose so as to wabble up and down while the machine was being used. Was this so?

A. It was.

Q. 19. Were the points of the finger guards ever intended to go below the level in those front-cut machines manufactured by C. C. Bradley & Son?

A. Never, except dropping in hollows, but not to cut below the level. The intention was—this finger bar was very thin and the cutter bar was thin and the guards were small; consequently it was set very close to the ground, so as to cut very close. It conformed to undulating surfaces; as, for instance, on a side hill the outer end of the cutter would drop down or be turned up, while the whole bar would rise and fall to conform to the surface of the ground.

Q. 20. Then was it this thinness of the cutter bar, guards, etc., that enabled the cutting of a low stubble, or to what was this due?

A. Yes, sir; it was the thinness.

Q. 21. I believe you have already stated, but, not being certain in reference to it, I will ask you again whether the finger guards were ever intended to have, or were capable of having, any forward or downward tipping, so as to make them point below the level or line of cut?

A. No, sir.

Q. 22. Then, if I understand you correctly, the position of the lug at the rear of the shoe was never changed except when the operator desired to change the line of cut, in which case he would
242 unscrew or loosen the bolt, adjust the lug to the desired position, and then screw up or tighten the nut, after which the finger bar was held rigidly in its new position and not allowed to wabble up or down. Is all this correct or not?

A. It is.

Q. 23. Would it have been practical to have used the machine

otherwise—that is to say, to have loosened the nut so that it would not have held the lug close or tight against the side of the push bar?

A. It wouldn't have done good work unless the lug was secured.

Q. 24. If I understand you correctly you say that you never heard of any intention to use the machine any other way—that is, without having the lug tight against the push bar so as to prevent any wabbling in the cutting apparatus. Is this correct or not?

Counsel for defendant states that this witness' whole testimony has simply been an assent to the propositions of counsel for the complainant; that the defendant's counsel has patiently waited, hoping that some proper question would be addressed to the witness by the counsel for the complainant. This question is objected to as leading, incompetent, and about the sixth repetition to the same question, and an evident — to make the witness testify to some subject which he does not understand.

A. It is.

Q. 25. In your answer to question 12 you have said that "the height of cut is regulated by a corrugated slotted iron," etc. Which part of the machine do you here refer to as corrugated, and how was it corrugated and for what purpose?

A. The lug attached to the inner end of the shoe was corrugated so that the inside bearing against the bar would hold it to its place when drawn up by this nut.

Q. 26. Were all those front-cut machines made in this way—that is, with the slotted lug corrugated?

243 A. That question I could not answer, because there were several manufacturers who manufactured this kind of machine. I can only answer as to those manufactured by C. C. Bradley & Son. They were all corrugated in that way.

Q. 27. Suppose one of those machines should now be found with a smooth lug—that is, a lug not having the corrugations which you have referred to—what would you say in reference to it?

A. The same effect would be produced by drawing the nut a little tighter. The object of the corrugations is to have it hold without drawing the nut very tight.

Q. 28. But what I meant was suppose you should now see one of those Bradley front-cut machines without a corrugated lug, would you consider that it was made in that way originally, or how would you explain its now having a smooth lug?

Objected to as a repetition of the former question, which the witness has already answered.

A. I should think that they had been trying to experiment with it. That was frequently done.

Q. 29. Do you mean they were frequently experimented with?

A. Yes, sir; they were trying experiments most all the time. If a machine was made in that way I should think it might have been one of the first machines they had made and the corrugations adopted afterwards.

Q. 30. Might not the change from a corrugated to the smooth lug

be also due to the fact that a new shoe had at some later day been put on the machine?

A. It might have been. It is common to change the shoe frequently.

Cross-examination by defendant's counsel:

244 X Q. 1. Do you understand the different devices in the Hubbard mower, so called, and the object and use of such devices?

A. I was conversant with the devices generally used and the objects of their use. My cousin was the inventor of these machines and I was the practical man in the field. Most all of the experiments were made under my supervision if I was there; but I was away quite a good deal, and experiments were made when I was away.

X Q. 2. You have stated in your direct testimony that this machine manufactured by Bradley & Son was so constructed as to adapt itself to the nature of the ground upon which it was operated—that is, that the cutter bar would rise and fall in traversing uneven surfaces, "adapting itself to uneven surfaces." What was the nature of the motion given to the cutter bar, and by what devices was this motion given?

A. It was given by a hinge attached to the push bar and attached to the front end of the machine, jointed at both extremities. There was also a joint at the back end of the push bar which allowed the free movement of the front part of the push bar up and down, to which the inner shoe was attached containing the cutter bar—the finger bar. Then there was a jointed brace running from the front part of the machine across to the inner shoe, which held the push bar in its place and finger bar, but at the same time allowed it to conform to uneven surfaces by rocking on different joints.

X Q. 3. It was intended by these different devices to give the cutter bar a rocking motion, was it not?

A. Lengthwise—that is, to allow either end to play up and down, but not sidewise.

X Q. 4. Now, suppose that this slotted lug on this model, "Defendants' Bradley Machine of 1863," was left to play up and
245 down on the pin to which it is attached, what would be the result? Wouldn't you get a rocking motion?

A. Yes, sir; you would get a rocking motion.

X Q. 5. How would you get it?

A. It would allow the bar to rock if it was loose, but it wouldn't be practical; it wouldn't do good work.

X Q. 6. Why not? Have you ever seen the machine operating with the nut that secures the lug loose?

A. Yes, sir; I have seen it operated with the lug loose. It didn't mow well; it didn't cut uniform height.

X Q. 7. Where did you see it operated in this manner?

A. I have seen it in several instances where the machine was being started—a new machine—the nut would be loose, but the workmen would not notice it, but as soon as the machine started you would see it was not doing good work and what caused it.

X Q. 8. What was the reason that this machine with the nut loose would not rock in a manner that would suit you—that is, that it would cut high when you wanted it to cut low, and *vice versa*?

A. Grass, of course, is thick and thin in places; it is not uniform. The surface is not level, and there is a difference in the surface as you progress. Consequently there is a different pressure on the bar as the machine progresses in the grass, according to the thickness of the grass. If the grass is heavy the tendency is to turn the guards down and cut very close. If you strike an obstacle or any little inequality of the surface the tendency would be to turn the guards down and cut very low. As you come in the lighter grass the pressure would not be so much, and the consequence would be that the heel would drop down and the point of the guards turn up, and then it would cut high—too high, probably.

246 Redirect examination by Mr. BANNING:

R. D. Q. 1. In your answer to cross-question 4, and perhaps in some of your other answers, you have spoken of the Bradley machines possibly having a rocking motion. What do you mean by this expression—that the finger bar could in cases supposed wabble up and down within limits above the level or that it could wabble up and down more than this? Could the guards go below the level or not?

A. They could not in this machine. By rocking motion I mean the wabbling motion within the limits allowed by the slotted lug. The rocking motion is not sufficient to throw the finger guards below the level. There is not sufficient play for the shoe; it could go just so far and no farther, and it could not go far enough to throw the guards below. A machine that would rock below the level I do not consider a practical machine.

WILLIAM H. HUBBARD.

BENJAMIN F. PORTER, a witness produced, sworn, and examined on the part of complainants, deposes and testifies as follows in answer to questions by Mr. BANNING:

Q. 1. State your name, age, residence, and occupation.

A. My name is Benjamin F. Porter; 61 years of age. My residence is South Chicago. I really can't say that I have any occupation at this time.

Q. 2. Where did you live and what business were you engaged in in 1862 and 1863?

A. I lived in Waukegan, Illinois; engaged in building houses and contracting, and also building reapers, sash, doors and blinds, and furniture, and also had a grocery store.

247 Q. 3. What was your firm name at that time and who were your partners?

A. The firm name was first Porter & Brothers and afterwards Porter & Brother. It was first composed of three brothers—myself, F. H. Porter, and J. Brown Porter—and was afterwards myself and J. Brown Porter.

Q. 4. Did you ever do any work for Alvaro B. Graham at that time, of Waukegan? If so, when and what work?

A. Mr. Graham and my firm made a few reapers together. I can't tell you the dates exactly; I should say about '63.

Q. 5. Do you have books kept by your firm at that time showing anything about this work or anything from which you can determine when it was done? If you have please produce the same.

A. I have a book in my hand showing the first entry charged Mr. Graham, February 22, 1863. This entry is as follows: "A. B. Graham, dr., to ½ pound tea, 75 cts.; 8 pounds of sugar, $1.00."

Counsel for defendants objects to this answer and the question as immaterial.

Q. 6. Can you determine definitely from the book whether this date is February 10 or February 22, 1863?

A. I cannot say positively, as both dates appear on the same page, but I think that it is the 22nd. I put down the dates both ways as they appear on this page.

Q. 7. How do you know that these entries relate to the work which Graham was doing in connection with your firm on his mowing machine?

A. When he commenced working on the machine he was to draw a certain salary—I can't tell what; I forget. Very soon he commenced an account, and I think this to be the first entry. We had a store, and we paid him by groceries and money, orders, etc.

248 Q. 8. Please state whether you find any other entries in this book relating to Graham's work on the machines in question.

A. February 28, 1863, "A. B. Graham, dr., to cash, $2.00;" March 7, 1863, "A. B. Grahan, dr., to cash for wood, $2.00;" "A. B. Graham, dr., to cash, $3.00;" "A. B. Graham, to one pound tea, $1.50; to one pound coffee, 30 cts.;" March 10, 1863, "A. B. Graham, dr., to 8 pounds sugar at 14, $1.12," etc.

Q. 9. As I understand you all these entries relate to payments in some form to A. B. Graham for work done under his agreement with your firm on his mowing machines. Is this correct?

A. It is.

Q. 10. Did he ever do any other work for your firm than his work on such mowing machines performed after his contract was entered into with your firm?

A. I could not say positively. I think not.

Q. 11. Did he ever keep any kind of an account with your firm before such contract was made?

—. I think not.

Q. 12. Do you remember how many mowing machines were built by your firm and Mr. Graham when the same were built or anything in particular about them? If so, please state the same.

A. I should say from '63 to '65, perhaps ten or twelve, maybe more. I could not say positively. I should think it must have been

the fall of 1863 that they were got into the field—the first ones. I was assisting about them, but I did not do much of the labor.

Q. 13. Were they being built at the time Mr. Graham was working with your firm and you were paying him in groceries, money, etc., as shown by your book above referred to?

A. They were.

249 Q. 14. Do you remember whether Mr. Graham had a model of his invention at the time he first came to your firm and proposed an arrangement looking to the manufacture of his mowers?

A. I couldn't say whether he had or not. My impression is he had not. As I recollect he had constructed an old machine over the year before; that is the impression I had from what he said. I don't know anything about it personally. He may have had a model, but I don't recollect it.

Q. 15. To refresh your recollection I call your attention to the statement of your brother, J. Brown Porter, in his deposition taken in the McCormick case in this court, that Mr. Graham "presented a model for a reaper and mower and we were to go on and build some together," and ask you whether your recollection is so clear on this matter as to enable you to say whether your brother was correct in this statement or not?

Counsel for defendants objects to this question, because it is an attempt to introduce into this record a part of a record in another case and an attempt to introduce the testimony of another witness in another case, and because the judge of this court has already ruled that such testimony so given in another case is not proper testimony in this case, and because this question is highly improper and incompetent.

A. It might have been correct; so far as my memory goes I can't recollect of having seen any model.

Q. 16. Please state whether or not this book which you have referred to is a book of original entries kept by your firm at the time of the dates therein and whether or not such entries are original entries made at that time in the usual course of business.

A. It is the original day book that Porter Brothers kept at that time, and the entries are in my handwriting and were made at the time of the transactions.

250 Counsel for complainants offers said book in evidence, and the same is marked "Porter & Bros.' Day Book."

Counsel for defendants waives the production thereof at the hearing.

Cross-examination by Mr. TALCOTT:

X Q. 17. Porter & Brothers, in addition to their other business, kept a grocery store at Waukegan, Illinois, did they not?

A. They did.

X Q. 18. During what years?

A. I don't recollect exactly, but it covered, I should say, from '60 to '64, and perhaps longer.

X Q. 19. Now, when did you first know A. B. Graham?

A. Couldn't say; I presume ten years before this transaction.

X Q. 20. Did he ever do any trading in your grocery until 1863?

A. I think not.

X Q. 21. He lived at Waukegan, did he not?

A. He did.

X Q. 22. Why did you say he never traded at your store until 1863?

A. I find no accounts against him until that time.

X Q. 23. Do you know whether Mr. Graham was ever in your store until 1863 or not?

A. I do not know whether he was or not.

X Q. 24. Were you well acquainted with him before that time?

A. I cannot say that I was well acquainted with him, although I knew him.

X Q. 25. He had a family at Waukegan before that time, had he not?

A. I cannot say how long before. I think he had at that time, but how long before I cannot say.

X Q. 26. How near did he live to your grocery store at that time?

A. I can't say.

251 X Q. 27. Do you know when Mr. Graham first came to your store—the year or month?

A. I couldn't tell you.

X Q. 28. Can you state what the trade was between your firm and Mr. Graham with reference to the manufacture of these mowers?

A. I cannot.

X Q. 29. Do you know how many machines were completed by your firm and Mr. Graham in 1863?

A. I should say we built some five or six. I don't know that you could call them completed; they were not much of a success.

X Q. 30. How many were completed so that they were used in the field?

A. Well, as I should think, there were five or six we got out. We got them out, but they were not much of a success.

X Q. 31. Do you know why they were not a success?

A. We had a great many breakages with the machine, perhaps owing to the patterns or castings not being strong enough.

X Q. 32. Do you know of any other reason why the machines could not be operated?

A. It is a long time ago. They had a suspended finger beam—the first ones we made—and we found they would not work well without a wheel or support of some kind at the end of the beam.

X Q. 33. Your firm discontinued the manufacture of these machines with Mr. Graham in the fall of '63, did they not?

A. I can't say whether we were two years at it or not.

X Q. 34. Did your firm make a contract with Mr. Graham to manufacture machines with him and afterwards discontinue making machines, and again, several years after, make another agreement with him to make these machines?

252 A. I should say not. We had an agreement, I think noth-

ing but verbal, that we were to make some machines, and if we made a success of it we were to have a permanent arrangement of some kind; but I think we never made any further arrangement, as far as I recollect.

X Q. 35. Why did you not make further arrangements; was it because the machines were not successful?

A. They had not been very successful, and we hadn't means to go further that we wanted to invest. Mr. Graham had made arrangements after that with other parties, and we had these machines on our hands and couldn't dispose of them to any advantage, because, as I said before, we had a great many breakages, and perhaps owing to deficiencies in the mechanical part of the work. It was new to Mr. Graham, I suppose, and it certainly was to us, to manufacture reapers.

X Q. 36. What became of the few machines that you manufactured and sold in 1863?

A. We received pay for some of them and some were left on our hands.

X Q. 37. Who did you sell any machines to and what became of them; how did they work?

A. Mr. Richard Dooley had one, William Merchant had one, Mr. Shawber, I think, had one, and I guess Mr. Wilder had one; I think that is all that I recollect.

X Q. 38. Did Mr. Merchant, Mr. Shawber, and Mr. Wilder all buy these machines in 1863?

A. I cannot tell you the date. I think they each had a machine.

X Q. 39. Did you build these machines for these parties that you have named in 1863?

A. We built the machines and sold them to them. I can't tell the date; it has all gone from my memory.

253 X Q. 40. Do you remember how the machines worked for these parties?

A. Well, they found a good deal of fault with them; they had breakages and stoppages that they complained of.

X Q. 41. Did you in 1865 and after your first contract with Mr. Graham make any more machines?

A. We did not, I think.

Redirect examination by Mr. BANNING:

R. D. Q. 42. Did your firm not afterwards, say about 1865, arrange with Mr. Graham to reconstruct or build over several of these old machines built in 1863?

A. Not to my recollection.

R. D. Q. 43. Might not that have been done without your now remembering it?

A. Yes, sir.

R. D. Q. 44. In 1863 the machine was in an experimental state, was it not?

A. It was.

R. D. Q. 45. And all the so-called sales first made were condi-

tional on the machines proving successful in the field, were they not?

A. Yes, sir; I think so.

R. D. Q. 46. You do not know whether any of the machines were actually sold in 1863 or not, do you?

A. No, sir; I do not.

BENJAMIN F. PORTER.

Testimony taken on the part of the complainants, pursuant to agreement of counsel, before Chas. H. Wheaton, a notary public, at Fabius, N. Y., June 8, 1887.

Present: Thomas A. Banning, Esq., of counsel for complainants, and H. H. Talcott, Esq., representing Messrs. Coburn and Thacher, counsel for defendants.

GEORGE W. WAY, a witness produced, sworn, and examined
254 on the part of the complainants, deposes and testifies as follows in answer to questions by Mr. BANNING:

Q. 1. You have been examined once before, I believe, in this cause?

A. Yes, sir.

Q. 2. What year is it that you are still positive that you assisted Frank Bramer, at Fabius, N. Y., in building a wooden-frame mowing machine?

Question objected to by counsel for the defendant on the ground that the question assumes that he helped build a wooden-frame machine.

Q. 3. You need not answer. I will ask another question. What kind of a frame did the first machine that you ever helped Frank Bramer make at Fabius, N. Y., have?

A. He made a wooden frame to try the planetary gearing on; it was never got up for a mowing machine.

Q. 4. You mean that it was a temporary contrivance?

A. That is what he said.

Q. 5. What year are you positive this was?

A. In the fall of 1863.

Q. 6. Where was Frank Bramer's shop at the time this wooden-frame machine was made?

A. It was on the same ground that the Bennett and Bramer shop stands on now.

Q. 7. How many wooden-frame mowing machines did you ever know of Frank Bramer making?

A. Never — but this one.

Q. 8. Where did he get his castings made?

A. He got some of them at Manlius.

Q. 9. Where did he get the others?

A. I don't know but he got them all there; I knew of his getting some there.

Q. 10. Where did he get the sickle or finger bar that he used
255 on that wooden machine that you helped him make in 1863?

A. Off from a machine belonging to Orsemus Hills.

Q. 11. How long after he made this wooden machine was it until you helped him build another machine?

A. I don't think there was two months between. There might have been, but I don't think there was. They commenced making patterns while we were setting up the wooden-frame machine.

Q. 12. Was that iron-frame machine completed that fall of 1863?

A. It was.

Q. 13. What was done with it?

A. It was tried in Albert Bramer's lot and was taken to the Manlius fair.

Q. 14. How do you know it was exhibited at the Manlius fair?

A. I was there and saw it there; whether it was entered for any premium at the Manlius fair of 1863 I don't know.

Q. 15. Look at the drawings of this Bramer patent of Dec. 19, 1865, No. 51546, and particularly at the block marked "*l*," to which the front end of the bar "L" is pivoted, and state whether the wooden machine which you helped Frank Bramer build and the iron machine that was exhibited at the Manlius fair contained that block "*l*."

A. They did not.

Q. 16. In this patent the finger bar can be turned up, owing to the joint connecting its inner end to the bar "J." How was it in that wooden-frame machine you helped Bramer build?

A. There was no joint to the inner shoe.

Q. 17. It was not capable, then, of being turned up, was it?

A. The bar wouldn't fold up; we had to take it off when we took the machine along the road.

256 Q. 18. Do you mean that the finger bar was rigid from its outer end to the point where it was connected to the wooden frame?

A. Yes, sir; it was a stiff bar.

Cross-examination by Mr. TALCOTT:

X Q. 1. What month in the year was the Manlius fair of 1863 held, at which this machine was exhibited?

A. I ain't positive whether it was the last of September or the first of October. My impression is that it was the first of October.

X Q. 2. Isn't it a fact that the guards on the finger bar of the machines made by Frank Bramer were closer together than in other machines, and that this was one feature of the machine that made it popular, because it cut lodged grass better?

A. I can answer the first part of that question. On the iron-frame machine the knives were smaller and the guards closer than on other machines. I don't think a machine with the guards close together will cut lodged grass as well; don't think it will go into the grass as easy as an open-guard machine.

X Q. 3. Where did Bramer get his finger bar for the iron-frame machine?

A. I always understood that he got the first one and the knives of King Preston. I have been told so; that is all I know about that.

X Q. 4. What season of the year did you say this wood-frame machine was commenced?

A. Right away after Orsemus Hills finished his haying. It might have been the last of July or the first of August. It might have been the middle of July.

X Q. 5. What makes you refer to Orsemus Hills' haying to fix your date?

A. I went with Bramer down to Orsemus Hills' to get his machine, but we couldn't get it that night that we drove down after it.
257 He said they had a small piece to finish, and then we could have the machine. We went down soon afterwards and got the machine and brought it up to the shop.

X Q. 6. What parts of this Hills machine did you use in making the first machine?

A. We always called the iron-frame machine the first machine, but in the wooden frame we used the wheels, the finger bar or the knives, and the lever, track clearer, pitman; I don't think of anything else.

X Q. 7. Please state when and where Frank Bramer built his first mowing machine, what you had to do with it, and briefly all you know about it. I mean the first; not what you call the first.

A. In the fall of 1863, at the old shop, on the ground where the shop now owned by Bennett and Bramer stands. I did the blacksmith work on it. I don't know how to answer the last part of the question.

X Q. 8. You have testified in this case before, haven't you?

A. Yes, sir.

X Q. 9. In cross-question 7 I put a question to you in the precise language that Mr. Ephraim Banning used in your direct examination, the same being question 7, and you made a very lengthy and particular answer. Since that time have you forgotten all you knew about the first machine?

A. The reason I answered as I did was that he (motioning towards Mr. Talcott) may consider the wooden-frame machine the first machine built. I always considered the iron-frame machine the first real mowing machine Frank Bramer ever built.

X Q. 10. I am not considering anything at all. I don't know anything about it. I want you, because you pretend to know, to state to the court where Frank Bramer built his first mowing machine, what, if anything, you had to do with it, and briefly all you know about it.
258 A. We put up the wooden-frame machine right away, right along as fast as we could do it after we got Orsemus Hills' machine. I think it was done in August, 1863; think it was tried in August. Then he went to work and built a machine.

X Q. 11. When and where did Frank Bramer build his first mowing machine?

A. Well, it was finished before the last of October, 1863, as near as I can remember, in the same shop occupied by him at that time.

X Q. 12. Of what material was the frame of this machine made?

A. It was an iron-frame machine.

X Q. 13. Then the first mowing machine ever constructed by Frank Bramer that you know anything about had an iron frame, and was completed some time in October, 1863, was it?

A. Except this wooden frame, which was gotten up to try the gearing on; that I never considered a machine.

X Q. 14. Which machine was it that was tried in Corbin's lot?

A. The wooden frame.

X Q. 15. After the wooden-frame machine was completed you took it out and tried it on Corbin's lot, did you?

A. Yes, sir.

X Q. 16. What did you mow in Corbin's lot with this wooden-frame machine?

A. Grass.

X Q. 17. Was it the first on second growth of grass?

A. I think it was the second. It was very short, I know.

X Q. 18. Where did you first try the iron-frame machine?

A. Albert Bramer's lot, I think it was.

X Q. 19. How did the wooden frame work in Corbin's lot?

A. Seemed to work pretty well.

X Q. 20. Who drove the team on the machine in Corbin's lot?

A. I couldn't tell.

259 X Q. 21. This wooden-frame machine that worked very well, you say, in Corbin's lot was a mowing machine, was it not?

A. Yes, sir.

X Q. 22. Was it the first or second machine made by Frank Bramer?

A. The first that I ever knew of.

X Q. 23. What blacksmith work did you do on this wooden-frame machine?

A. Fitted this finger bar on the machine; put a rear brace from the finger bar back; put a guard over the balance wheel to keep grass from getting in; made the pitman the right length for the machine; it wasn't before, and punched a hole in the axle-tree; put in a steel plug to run the planetary gearing. I made the bolts for the machine what they used; couldn't tell how many. That's all I think of now.

X Q. 24. How was the rear brace secured to the shoe or finger bar and main frame?

A. I think it was bolted onto what we could call the main brace, and was snipe-billed to the rear of the main frame.

X Q. 25. How was the main brace secured?

A. I think that was secured with a snipe bill; yes; I know it was, to the left-hand corner of the front end of the machine.

X Q. 26. How was it secured at the other end—I mean at the finger bar or shoe?

A. With bolts; bolted on.

X Q. 27. It was rigid there, was it—formed a rigid connection with the finger bar or shoe?

A. It was bolted to the finger bar or shoe. Of course, the lap took 2 bolts and stopped right there, the main brace did.

X Q. 28. There was no joint where the main brace and finger bar or shoe joined, was there, and you will swear to it?

A. There was none on the wooden-frame machine; no joint at the inner shoe.

X Q. 29. What sort of a motion would the snipe bills give to the finger bar when the machine was in operation on uneven ground?

260 A. That kind of a joint is something like a hinge; that is as near as I can get to it. I don't know exactly what he means by that.

X Q. 30. Would those snipe-bill joints allow a rocking motion to the finger bar?

A. I don't know but it would. I couldn't say.

X Q. 31. Where did this main brace come from; who made it?

A. Taken right off with the finger bar from Orsemus Hills' machine.

X Q. 32. What patterns were made from this wooden-frame machine, and who made them?

A. The patterns of this tub gearing; this is all I know of. I couldn't tell who made them; I couldn't swear positively.

X Q. 33. You made patterns for and cast new tub gearing for the wooden-frame machine, did you?

A. I didn't make them; they had new tub gearing brought there and put onto the wooden-frame machine.

X Q. 34. How long did it take to get up the pattern and make the castings for the new tub gearing?

A. I think we had the machine done within a month; it might have been more.

X Q. 35. All there was new in the wooden-frame machine was the wooden-frame tub gearing and rear brace, was it?

A. I think the crank shaft and the little balance wheel on the end of it and the boxes for the axle and crank shaft were some that they made there.

X Q. 36. The rest was all taken out of Orsemus Hills' old machine, was it?

A. I think so.

X Q. 37. Describe the tongue and tell how and where it was secured.

A. I cannot do it.

X Q. 38. Was it a stiff or jointed tongue?

A. I couldn't say. Phillips and I have had a good many arguments over that.

X Q. 39. Now, in the iron-frame machine what was new?

261 A. Finger bar, all the braces, seat, seat springs, knives, pitman; don't know whether the same wheels were used or not.

X Q. 40. What was there for the men to make patterns of if there was nothing new in it but what you have stated?

A. They had to make a pattern of the frame. I don't know whether he used the same wheels or not. He fitted up these wheels and cast from them, but whether before he made the iron-frame machine or not I couldn't say. It is my impression that he did get a new set of wheels, as he had them painted up very nicely, but I am not positive; I couldn't tell.

X Q. 41. He didn't make patterns for the finger bar to either one of the machines, did he?

A. The finger bars are steel. I think he bought the finger bars and knives of King Preston—I've been told so—for the iron-frame machine that was.

X Q. 42. Which did it take the longest to make—the wooden-frame or the iron-frame machine?

A. The iron frame; the most work on it.

X Q. 43. What more work was there on it than on the wooden?

A. Fitting it up, making a pattern for it; had to make all the braces for it. I don't think of anything more.

X Q. 44. What patterns did you have to make for it?

A. I didn't have to make any.

X Q. 45. What patterns did any one have to make for it?

A. The pattern of the frame.

X Q. 46. That was all, was it?

A. I think I have stated once about the boxes.

X Q. 47. You said once that the boxes were made for the wooden-frame machine. I want to know what new patterns were made for the iron-frame machine. If there were any patterns made for the new machine I want to know all about it.

262 A. I think there were patterns made for the boxes and there was a new lever to this iron-frame machine. I don't think of anything more.

X Q. 48. Do you think it was less work to make patterns for the planetary gear than to make patterns for what you have just stated?

A. Well, I don't know; I couldn't tell.

X Q. 49. Now, what new castings were made for the iron machine? State them all.

A. The frame, for one thing; the lever, balance wheel, boxes. I don't know whether the wheels were made new or not. I don't think of anything more.

X Q. 50. Do you know whether the wheels were cast new or not; what do you think about it?

A. I do not know whether they were or not. I couldn't say.

X Q. 51. Mr. Bramer got his patterns and castings right the first time, so that all you had to do was to put them together and go right out and mow, and they would mow successfully, wouldn't they?

A. He was always altering and changing his patterns as long as I knew him; these castings had to be fitted up.

X Q. 52. Did he get a good many pieces cast over again and changed?

A. Not that I know of on his first iron-frame machine.

X Q. 53. Haven't you stated that he changed his patterns a good deal?

A. When he got to making machines he did. He changed the shape of his frame and the shape of his wheels.

X Q. 54. Then when he got to building machines he changed his patterns a good deal, but when he was making his invention, his first machine, he made no changes whatever, did he?

A. I don't know whether he did or not; he didn't make his patterns in my part of the shop.

263 X Q. 55. How was the main brace secured to the finger bar in the iron-frame machine?

A. It was bent with a cold shut around a $\frac{5}{8}$ or $\frac{3}{4}$ pin or bolt—went in and was fitted into the block or cap on the inner shoe, and a bolt went through the cap and the end of the main brace, the cap fastened with the two bolts that fastened the inner shoe to the finger bar, making a hinge joint.

X Q. 56. The main brace was secured to the shoe and not directly to the finger bar itself in the iron-frame machine, was it not?

A. The finger bar went between the shoe and this cap, and the two bolts went through the shoe, the finger bar, and the cap.

X Q. 57. Do you know whether or not Mr. Bramer, in getting up the castings for the gearing for the wooden machine or the other castings for the iron machine, changed the castings at all?

A. I didn't know as he did; I supposed they were the same for the gearing.

X Q. 58. I mean did Mr. Bramer conceive of his idea, have patterns made and castings from such patterns, and use such castings without further change or alterations, so far as you know?

A. On this machine I don't know of his changing his patterns; he might have done it, but I don't know.

X Q. 59. And both machines worked successfully, did they not?

A. I never thought much of the workings of the wooden-frame machine; never thought it worked very satisfactorily anywhere. We made some alterations in the iron-frame machine in the rear brace.

X Q. 60. What alterations did you make in the iron-frame machine, and were they made after trial?

A. In the bend of the rear brace we altered it by bending the rear brace so that it would strike on the main brace and keep the points of the guards from going into the ground; they were made after trial.

264 X Q. 61. After a trial where?

A. After a trial on Albert Bramer's lot.

X Q. 62. At what season was this trial made and who was present?

A. It was in the fall of 1863. Frank Bramer was present.

There were quite a number there; I can't call their names. I think Albert Bramer was present. I was there.

X Q. 63. The guards on the finger bar run into the ground at Albert's, did they, and you made an alteration?

A. I don't know that they did. Bramer said he wished — would bend the brace so that the points of the guards could not go below a level.

X Q. 64. Then the trial of the iron machine was not satisfactory, was it?

A. I couldn't say whether it was or not. It seemed to work well.

X Q. 65. How did it work better than the wooden-frame machine; what was the difference in their working?

A. This machine had a joint at the inner shoe of the finger bar; had smaller knives, closer guards, better for rough, stony ground.

X Q. 66. In the iron machine how was the main and rear braces, if there was any, secured to the frame of the machine and the finger bar or secured at either end?

A. The front end of the rear brace had a hole through to admit a ¾ round iron, and we put the ¾ iron through that, bent the ends around very near together, flattened these irons, made holes through, and riveted this loop onto the main brace, with the loop projecting in front of the main brace. That attached the front end of the rear brace to the front side of the main brace. The other end of the rear brace took the bolt that went down through the back end of the pole. The outer end of the main brace was fastened to the frame with a snipe bill that went through the frame.

265 X Q. 67. What sort of a motion would this give to the finger bar when the machine was in operation?

A. It would allow the bar to fit itself to the shape of the ground— what Frank used to call the rolling motion.

X Q. 68. What other lot besides Mr. Corbin's was this wooden-frame machine tried in?

A. In Mr. H. C. Phillips' lot. I don't know of any others.

X Q. 69. How long after it was tried in Mr. Corbin's lot was it tried in Mr. Phillips' lot?

A. I think it was right along. It might have been a week and it might not.

X Q. 70. Did you see it tried there?

A. I did. I went over with Bramer.

X Q. 71. In what kind of grass was it tried and how did it work?

A. Very nice grass; nice bottom, first cutting. He hadn't finished his haying on one part of his lot.

X Q. 72. Who drove the machine and how did the machine work?

A. We all drove it short drives at different times to try the machine. It didn't work as well as I have seen machines. It went along, cut very well, didn't draw as hard as the machines we took the team off from. We took the team off from Phillips' machine and put on this.

X Q. 73. Who drove?

A. Mr. Phillips drove; Frank Bramer and I did.

X Q. 74. Was there a stiff finger bar on that machine you have just stated you tried on Mr. Phillips' lot?

A. Yes, sir; the Pine finger bar off the Pine machine.

X Q. 75. You didn't work at Frank Bramer's at any time in 1862, did you?

A. No, sir; I did not.

X Q. 76. You don't know of Frank Bramer's building any
266 wooden-frame machine with the finger bar secured to the main brace by a joint or hinge, do you?

A. No; I do not.

X Q. 77. You couldn't swear that there wasn't one built by Frank Bramer in his shop in 1862, could you?

A. No, sir; I wasn't there.

X Q. 78. Is what you testified to in your prior examination had at Fabius May 12, 1887, true?

A. I suppose it was.

X Q. 79. Did you have a conversation with Frank Bramer about constructing a mowing machine, as you have stated in that deposition?

A. I don't know what particular point you have reference to. I have had quite a number of conversations with him in regard to mowing machines.

X Q. 80. I didn't ask you any such question. I asked you if you had the conversation you swore to in your deposition of May 12, 1887.

A. I suppose I did or I wouldn't have sworn to it.

X Q. 81. Did you swear that he said to you before he made a machine, at the close of the haying season of 1863, that he didn't like the Pine machine because they were a stiff finger bar?

A. Yes, sir; we had a conversation. He liked them all but that; he didn't like that in them.

X Q. 82. Did you say to him then, "Frank, why don't you get up a machine of your own? You are smart enough," and did he say in reply, "I have been thinking of that very thing myself?"

A. Yes, sir.

X Q. 83. Did you testify at that time anything about his stating to you that he wanted to adopt a tub gearing to mowing machines?

A. I don't recollect whether I did or not.

X Q. 84. Did you testify in that deposition, to a question by
267 Mr. Banning, as to when and where Frank Bramer built his first mowing machine; in substance, that after Orsemus Hills got through haying Frank Bramer and you got Hills' machine, took it to Bramer's shop, took it to pieces, and used the wheels to set up a new machine with; made patterns, got castings for a tub gearing; after you got it done tried it in Corbin's lot?

A. That is all so, except I didn't want it understood that I made the patterns.

X Q. 85. Did you also testify in substance in regard to said machine as follows: "The first was a snipe bill looped up into the left-hand side of the front end of the frame. Then there was a rear

brace that was fastened onto the main brace by means of a round iron loop that lay over the front side of the main brace. That loop was to give a tilting or rolling motion to the cutter bar. There was a joint where the cutter bar came onto the main brace—the gearing was a tub gearing—the rear brace passing over the main brace into this iron loop, and bent in such a manner before the guard points would run into the ground." Did you testify as I have stated in this examination in regard to the first machine made by Frank Bramer?

A. That was the description I gave of the iron-frame machine tried at Albert Bramer's.

X Q. 86. Do you mean to say that you undertook to describe two machines in this first deposition?

A. The wooden machine was tried in Mr. Corbin's and the iron frame in Albert Bramer's.

X Q. 87. Then you undertook to describe two machines in your deposition of May 12, did you?

A. I did; yes.

X Q. 88. Did you intend to say or say anything about two machines then in your deposition? I will show you your deposition, and you may point out to me where you refer to two machines.

268 Counsel for complainants, in order to facilitate matters, asks the witness to look at page 2 of his deposition and then at page 15 of the copy before you and answer the question.

Defendants' counsel objects to the witness being coached in this manner by his counsel.

A. I did. The machine we tried in Corbin's lot was not the machine we tried in Albert Bramer's lot. We took the tub gearing out of that machine and put it in the iron-frame machine and tried that in Albert Bramer's lot. We also took it to the Manlius fair the same fall.

X Q. 89. Then in the 6th and 7th lines from the bottom of the second page of this copy, where you say, "After we got it done we tried it in Corbin's lot; also in Albert Bramer's lot. I couldn't state the exact time this machine was built." You mean, do you, in this language *and* to refer to two machines—you intended to refer to two machines—when you gave your deposition; do you swear this is so?

A. Yes, sir; I do.

X Q. 90. Do you mean to swear that you intended to describe two machines in your deposition of May the 12th?

A. I described in the jointed finger bar the complete machine we tried at Albert Bramer's.

X Q. 91. Do you mean now to swear that patterns were made and castings for a new tub gear for the wooden machine first made?

A. Yes; and the same gear was used in the iron frame.

X Q. 92. Do you mean to swear that you intended to describe two separate machines in your deposition of May 12?

A. Yes, sir.

X Q. 93. Did you state to Orsemus Stillman day before
269 yesterday that you was not in Frank Bramer's shop when the wood-frame machine was made?

A. No, sir; I told him I was not there in 1862.

Redirect examination by Mr. BANNING:

R. D. Q. 1. In that iron-frame machine of 1863 how broad was the main brace?

A. About three inches—might be a little more.

R. D. Q. 2. What did Frank Bramer tell you was his main object in getting up a mowing machine?

A. The first he spoke of was to try the planetary gear on mowing machines.

R. D. Q. —. You have spoken of the arrangement of parts in the iron machine of 1863 producing a rolling motion of the finger bar. Could the points of the guards freely fall as well as rise in that machine?

A. Just as far as the rear brace would let them. When the rear brace struck the main brace they couldn't go any lower.

R. D. Q. 4. As the machine was made by Frank Bramer in the fall of 1863, could the points fall below a level?

A. Not after I altered this brace over.

R. D. Q. 5. And you say that was done after the trial of the iron-frame machine in Albert Bramer's lot?

A. It was.

GEO. W. WAY.

By consent of counsel, adjourned to meet at Vanderpool House, Manlius, June 10th, 1887.

JUNE 10TH, 1887.

Met pursuant to adjournment.

Present: As before.

HARMON BAKER, a witness produced by the complainants,
270 being duly sworn, testifies as follows in answer to questions by Mr. BANNING:

Q. 1. State your name, age, residence, and occupation.

A. Name, Harmon Baker; age, 74; residence, Manlius, N. Y.; occupation, retired farmer.

Q. 2. How long have you lived in the neighborhood of Manlius?

A. 74 years; I was born within a mile and a half of here.

Q. 3. Did you ever own and operate a screw-power mowing machine built by Russell and Tremaine at this place?

A. I have owned and run it.

Q. 4. Who did you buy it of?

A. Russell.

Q. 5. When did you buy it of the firm of Russell and Tremaine?

A. To the best of my recollection, in 1861 or 1862.

Q. 6. Do you remember who was foreman of Russell & Tremaine's?

A. Stephen Cheeney, to the best of my recollection.

Q. 7. How many years did you use this machine in cutting grass?

A. I used it either four or five years cutting grass and grain; it was a combined machine. I then sold it.

Q. 8. State whether or not the finger bar of that machine could roll or rock in operation so as to raise or lower the points of the guards.

A. It could not; they were perfectly stationary.

Q. 9. Could the finger bar fold up when the machine was being taken from one field to another?

A. It could, by going to its end and raising it up and putting a bolt through it; you had to raise it up by hand.

Q. 10. But you say the finger bar could not roll to ad-
271 just its cutting edge to the inequalities of the ground?

A. It could not.

Q. 11. You operated the machine personally?

A. I have always.

Cross-examination by Mr. TALCOTT:

X Q. 1. You may describe this machine; all of it.

A. 'Twas a large, heavy, clumsy machine; heavy wood-work the frame was; the gearing was all heavy. It was made of wood. The frame was made of wood and bolted together with rods, and the gearing was cast iron; cutter bar was said to be steel, with malleable fingers; said to be small wheel or roller on the end of the cutter bar, that kept it just so far from the ground; the seat was cast iron. I think that the rod that held the cutter bar when it was raised up was wrought iron; the main draw bar was wrought iron; the tongue was wood, with cast iron on the upper end where the neck yoke went on. That is as near as I can describe it, unless you have some particular question I don't understand. There was also a heavy brace bar of wrought iron and a heavy shoe.

X Q. 2. I want you to describe particularly the mechanisms or devices that actuated the working part of the machine when in operation, and more particularly the devices that were attached to the shoe or finger bar and by which the finger bar was attached to the main frame of the machine, especially; also describe the drag bar, if there was one; where it was situated, by what devices it was secured, and what offices it performed.

A. That was done by a screw from the main wheel on the ground by rollers from the main wheel to the screw. There was nothing attached to the shoe except the brace bar and draw bar and the
roller I have described. The power went from the screw on
272 the driving bar to the finger bar. We used to call them cutter bars. I don't know what you mean by a drag bar—the only drag bar I know of, unless you call that little wheel on the end of the cutter bar one; nothing else I can find is a drag bar on that machine.

X Q. 3. How was the finger bar attached to the machine and secured?

A. By a heavy wrought-iron draw bar and the brace bar both.

X Q. 4. Now you may describe the heavy wrought-iron draw bar and tell how it was secured in the machine.

A. It was secured in the fore part of the machine by heavy wrought-iron bolts running from there to the shoe. It was also secured by a heavy brace bar running the other way from the shoe. There may be something there we may differ on. Some call the end where the roller is the shoe, but I call the end next to the machine the shoe.

X Q. 5. How was this heavy draw bar secured to the finger bar? State particularly.

A. That was secured, I think, by bolts. That is a question I won't be positive on, it has been so long. That's my opinion.

X Q. 6. Then you say, do you, that this heavy wrought-iron draw bar was secured to the front of the machine by bolts and run straight to the finger bar and was directly and rigidly bolted to the finger bar; do you?

A. No, sir; I didn't say so and I don't say so. It runs straight to the shoe, and that is fastened to the finger bar or cutter bar. The draw bar is fastened to the shoe, and the cutter bar is also fastened to the shoe.

X Q. 7. Was this draw bar rigidly fastened in front to the machine by bolts, and did it run straight back to the shoe to which it was rigidly bolted?

A. It did. It was fastened to the front by a bolt through an eye, so to give the bar a chance to play up and down. It was
273 bolted solid to the shoe.

X Q. 8. Was the cutter bar or finger bar rigidly bolted to the shoe?

A. It was heavily bolted; solid as bolts could make it.

X Q. 9. But the upper end of the draw bar was fastened to an eye, so as to allow it to play up and down, was it?

A. Yes, sir.

X Q. 10. Wouldn't that allow the finger bar to play up and down with it?

A. It would go up and down when you struck a knoll or stone. It would raise right up and fall down when you got over it.

X Q. 11. How was the rear brace secured and what was it secured to?

A. Secured to the wood-work on the hind part of the machine by an eye, the same as the front draw bar, called a brace bar.

Redirect by Mr. BANNING:

R. D. Q. 1. As I understand, this machine had but one driving wheel. Is this correct?

A. But one driving wheel.

R. D. Q. 2. In running straight back from the frame to the shoe, do you mean that the draw bar ran back on a line parallel with the tongue?

A. Yes, sir.

HARMON BAKER.

Testimony taken on the part of the complainants before George C. Cook, notary public, at the office of Messrs. Banning & Banning, Chicago, Illinois, July 30th, 1887.

Present: Ephraim Banning, Esq., of counsel for complainants, and J. M. Thacher, Esq., of counsel for defendants.

WILLIAM S. BATES, a witness recalled and sworn on the
274 part of complainants, deposes and testifies as follows in answer to questions by Mr. BANNING:

Q. 1. Are you the same William S. Bates who has heretofore testified in this cause?

A. I am.

Q. 2. Please look at this model which I now hand you, marked "Def'ts' Ex. Preston's Model, C. H. Wheaton, N. P.," offered in evidence by the defendants in this cause, and state whether or not a mowing machine so constructed would contain or embody the inventions described in the Graham patent sued on, No. 74342, and mentioned and claimed in the first and second claims thereof, assuming also that swivel joints, or the equivalent of swivel joints, would be used to connect the brace bar or vibratable link to the rear left-hand corner of the frame, and the forward end of the draft bar to the front right-hand corner of the frame.

A. A mowing machine constructed according to the Preston model, with the changes suggested in the question as to the joints, would not contain the Graham invention as defined in the first and second claims of the patent sued on, for the following reasons:

Graham's invention, as defined in his first claim, consists in a combination of the gearing carriage, the finger bar, the vibratable link connecting the beam and carriage, a swivel joint in said link, a draft or push rod connecting the beam and carriage, and a swivel joint in said draft or push rod at its connection with the finger beam or shoe. These elements are all necessary in this combination, and the omission of any one of them would be fatal to its value unless an equivalent be substituted. This is particularly true of the swivel joint between the draft or push rod and the finger bar, this swivel being absolutely necessary to permit the free rising or falling at either end of the finger beam without straining the
275 pitman and throwing it out of line with the cutter bar which it operates, and also to permit the proper folding of the beam for transportation without straining the pitman. Besides this the joint is necessary in the rocking of the beam backward and forward. The importance of this swivel will be perhaps clear when it is remembered that the slightest looseness in the joints of the pitman is fatal to the machine, owing to its rapid backward and forward motion, and the consequent rapid changes in the direction of the strain.

Turning now to the Preston model, I find that, whatever else it may have, it entirely lacks a swivel between the drag bar and the shoe, and therefore lacks one of the most important elements of Graham's combination. As a result of this omission, a machine

constructed according to the Preston model, either with or without the changes suggested in the question, would be a very crude and imperfect affair. Every time the machine met with an unevenness in the ground which would cause the beam to rise or fall at either end there would be a severe strain upon the pitman, a binding of the pitman and the cutter bar, and a tremendous friction. Every time the beam was folded there would be a similar strain brought upon the pitman. It is not apparent from the model whether the beam in the Preston machine is capable of being rocked forward to depress the finger points or not, but in all probability it was not, first, because that motion was unknown in drag-bar machines prior to Graham's invention, and, second, because in that part of the country in which I understand the Preston machine was made and used the ground is very stony, and it was always considered objectionable to depress the finger points.

276 The swivel joint at the front end of the drag bar, between it and the frame of the machine, would not obviate the above objections nor even lessen them. This is apparent from Graham's machine, in which he has the equivalent of a swivel joint at the front end of his draft rod, but nevertheless found it necessary to also provide a swivel between the draft rod and the finger beam. Therefore, as the Preston machine lacks this swivel between the draft bar and the finger beam, it, for that reason if for no other, does not contain Graham's invention. It may be remarked that the Preston machine is about the same style of machine as the old Ball patents of 1857 and 1859, and is no more like Graham's than they are.

Graham's second claim embraces in combination the same elements as the first, with the addition of an arm to control the rocking of the finger beam. The Preston model has no arm nor anything else to rock or control the rocking of the finger beam, and therefore, for that reason as well as for the reasons stated in speaking of the first claim, it does not contain Graham's invention, as defined in the second claim of his patent sued on.

Cross-examination waived.

WILLIAM S. BATES.

ALFRED HART, a witness produced, sworn, and examined on the part of complainants, deposes and testifies as follows in answer to questions by Mr. BANNING:

Q. 1. State your name, age, residence, and occupation.

A. Alfred Hart; age, 51 years; residence, Evanston, Illinois; occupation, general agent for the sale of reaping and mowing machines.

277 Q. 2. For whom are you general agent, how long have you been such, and what experience have you had in handling mowing machines?

A. William Deering & Company for nine years, as general agent, and I have had more or less experience with mowing machines since 1865.

Q. 3. Into how many classes have mowing machines been divided with reference to the finger bar?

A. There have been two classes—the rigid bar and the rocking bar.

Q. 4. Are these two classes both in market now, or what are the facts in this respect?

A. I do not know of any rigid bar in the market at present. The demand for rocking bar has driven out all rigid-bar machines I know of. According to my information, the Walter A. Wood Co. were the last to have made rigid-bar machines. They changed to the rocking bar in 1886.

Q. 5. What is the special object or utility of the rocking or tilting bar in practical work, and is it an important feature or not?

A. It is an important feature. The upward turning of the guards from the level facilitates passing over obstructions, and the downward tilt of the guards enables the machine to cut lodged or fallen grass. It is especially valuable in lodged clover.

Q. 6. How much depression of the guards is necessary in ordinary work—that is, in the cutting of grass or clover fallen or lodged in the usual way and to the usual extent in fields which have been subjected to influences which usually cause grass or clover to fall or become lodged—not taking an extreme case either way?

A. I should say half an inch depression of the points of the guards. I think I have measured as much depression as three-quarters of an inch, but that would be exceptionable, so far as
278 my experience has gone. Less than half an inch will not do as well as half an inch, but it will do better than nothing.

Q. 7. Look at this model I now hand you, marked "Def'ts' Ex. Preston's Model, C. H. Wheaton, N. P.," offered in evidence by the defendants in this cause, and state whether or not a mowing machine so constructed, but with swivel joints or the equivalent of swivel joints connecting its brace and draft bar to the frame, would be a rocking-bar machine; or, in other words, whether its finger bar would be capable of being rocked backward and forward so as to elevate and depress the points of its guards.

A. I should not call this a rocking bar, but it might have been so intended; it would depend entirely on the exactness of construction.

Q. 8. What would you say as to the practicability of its rocking motion, on the assumption that it had one?

A. I should not consider it practical.

Cross-examination by Mr. THACHER:

X Q. 1. Why shouldn't you consider it practical?

A. The principal reason would be the rigid attachment at either end of the drag bar limiting its motion in one of two directions; second, it would throw the pitman out of line with the knife.

X Q. 2. What do you mean by stating that the drag bar has a rigid attachment at either end; do you consider that a swivel joint connecting the drag bar with the main frame is a rigid connection; is that what you mean by a rigid connection?

A. So far as lengthening it or shortening it is concerned.

X Q. 3. Is the lengthening or shortening of the drag bar the principle that gives rocking motion to the finger bar?

A. For practical use I should so consider it.

279 X Q. 4. Then you don't consider that having the drag bar and brace attached to the frame by swivel joints would give rocking motion to the finger bar, but if, in fact, there were devices by which those parts could be shortened or lengthened such devices would give the requisite rocking motion to the finger bar, would they?

A. I think swivel-joint connections will give a rocking motion, but when so arranged as to lengthen or shorten the drag bar will make it more practical.

X Q. 5. In the model before you state how you would arrange these swivel joints so as to lengthen or shorten the drag bar in order to give the requisite rocking motion to the finger bar.

A. I would do away with the front joint and put in its place a link or slot, that the end of the drag bar may be carried up or down.

X Q. 6. At which end of the drag bar would you have this link or slot?

A. At the end that is attached to the frame.

X Q. 7. Don't you find the end that is attached to shoe playing in a slot?

A. I should not so consider it.

X Q. 8. What is it?

A. I should call it a limited hinge attachment.

X Q. 9. What does this hinge attachment allow the shoe to do?

A. From its lowest point it would permit the front end of the shoe to be elevated.

X Q. 10. It allows it the same motion that your proposed link at the end of the drag bar would allow it, does it not?

A. No, sir; the link at the front end of the drag bar allows the bar an up-and-down motion, while this only admits of an upward motion.

X Q. 11. Do you mean that when this model is so placed that shoe is level, and so the finger beam, if attached thereto,

280 would be level, that the joint between the shoe and the drag bar will not permit the front end of the shoe to be depressed?

A. If this assumption of position is understood to be the same as in field-work, then I say no, and this, if the lowest position of the bar, is the only position it can have. The question assumes that level is the lowest or normal place of the bar in use. This is what I understand by the question.

X Q. 12. You haven't answered the question. I asked a question about a model before you. Now, please take that model, place it so that the shoe is level, and then state whether the joint between the front end of the shoe and the drag bar will permit the front end of the shoe to be depressed.

A. I think the hinge connection on this shoe attached to this model will admit of a depression of the front end of the shoe below a level.

X Q. 13. You have stated on your direct that there have been only two classes of mowing machines—"the rigid bar and rocking bar." What do you mean by a rigid-bar machine?

A. A rigid bar is one so attached that the guards do not have a downward motion; a rocking bar I understand to be one that the guards may be thrown up or down, or both.

X Q. 14. Are you sure your definition of a rigid-bar machine is the one which has been accepted in the art almost from the time practical mowing machines appeared in the field?

A. I am not advised what explanation others may have accepted. This is my understanding of a rigid bar.

X Q. 15. Did you ever hear of a class of mowing machines designated as hinge-bar machines?

A. I have heard of hinge-bar machines.

X Q. 16. Then that is in addition to the two classes you first named, is it?

281 A. In the answer making two classes the question of folding the bar was not included or considered.

X Q. 17. I will quote the third direct question: "Into how many classes have mowing machines been divided with reference to the finger bar?" Isn't that a broad question, asking you to give all the classes of machines that you know of, so far as the finger bar enters into the description of the machine?

A. However broad the question referred to may be, the answer only included the one thought of a rocking bar or a rigid bar.

X Q. 18. Then you didn't attempt to answer the question as it was put, did you?

A. I only attempted to answer the question relative to these two points.

X Q. 19. How came you to limit your answer to this broad question to the two points you have mentioned?

A. Purely accidental.

X Q. 20. Then you did not mean to have it understood by your answer to question three that there have been only two classes known in the art, namely, a rocking-bar and a non-rocking-bar machine?

A. Only so far as these points distinguish the classes.

X Q. 21. You may explain now what you understand by a hinge-bar machine.

A. I understand a hinge-bar machine to be so arranged that the bar will fold up for transportation, and not necessarily having anything to do with the rocking of the bar.

X Q. 22. Does that term as applied to a class of machines have anything to do with the movement of either end of the finger bar as it is drawn over the ground?

A. I think it does. In rough ground if either end went over an obstruction the opposite end would rise with it.

X Q. 23. Do you mean that in a hinged-bar machine if

282 either end of the finger bar is raised by passing over rough ground the other end is also raised with it?

A. I should have said this would be the effect where there was no hinge.

X Q. 24. How would it be where there is a hinge? My question inquired about such a machine.

A. Just the opposite effect.

X Q. 25. Do you mean that either end of the finger bar would raise and lower without raising or lowering the other end?

A. I do; in a hinged-bar machine.

X Q. 26. What kind of a machine would you call one in which there were no hinges for the finger bar and neither end could be raised or lowered without taking the other end with it?

A. I do not know of any such machine. If made I should call it a stiff bar, meaning that the bar would not fold.

X Q. 27. You never saw such a machine?

A. I have seen such a machine.

X Q. 28. They used to be made quite extensively, did they not?

A. I think I never had to do with only two of them. One was made in Beloit, Wis., and the other at Rockford, Ill.

X Q. 29. That is not the question. I asked you whether or not this kind of a machine was formerly made quite extensively. I have not asked you anything about what machines you have handled.

A. As I understand the term "extensively" to-day I should say no. A few machines were made thirty years ago of that kind.

X Q. 30. Did you ever know of the old Ketcham machine?

A. I have never known the Ketcham machine.

X Q. 31. Did you ever hear of that machine?

A. I have heard of it.

283 X Q. 32. Did it have a hinged finger bar?

A. I do not know.

X Q. 33. Do you know whether or not a good many of the old Ketcham machines were manufactured?

A. I do not know how many.

X Q. 34. Did you ever hear of the Kirby machine?

A. I have heard of it.

X Q. 35. What kind of a finger bar did the Kirby machine have?

A. The first Kirby mowers that I knew anything of were a stiff finger bar, I think; the later ones were a hinged finger bar.

X Q. 36. When did the hinged bar appear in the Kirby machine?

A. I do not know.

X Q. 37. Do you know anything about the early McCormick machines?

A. I know very little about the early McCormick mower.

X Q. 38. Do you know whether they were hinged-bar machines or not?

A. The first I remember to have seen was a hinged-bar machine.

X Q. 39. What year was that?

A. I don't think I can give the year. It was fifteen or twenty years ago; perhaps twenty years ago.

X Q. 40. What do you know about a class of machines intended for use with a rake to discharge the gravels when used as a reaper, and also designed for use as a mower by removing the raking apparatus, and generally known as a combined machine?

A. I know that such machines were made and used quite common over the country, and largely made and used.

X Q. 41. Did they generally have a hinged finger bar or not?

A. In the earlier history of the manufacture and use of combined machines I think the mower bars were stiff.

284 X Q. 42. What is the difference between a stiff finger bar and a rigid finger bar?

A. I understand a rigid bar to be one having a hinge but not a rocking bar; a stiff bar is without a hinge.

X Q. 43. Then a rigid bar is one in which the ends can move up and down without affecting each other, is it?

A. That is what I understand by a rigid bar.

X Q. 44. Then you understand the term rigid to mean movable, do you?

A. The term rigid as applied to mower bars to-day, as I understand it, is used in an accommodated sense, applied to the rocking of the bar or not, and having no reference to the hinge of the bar, there being no bars in the market to-day without hinges.

X Q. 45. Don't you know it to be a fact that from the time hinged-bar machines appeared in the market years ago the term rigid bar was used to distinguish machines that had no hinge at the bar from those that had?

A. I do not know it.

X Q. 46. Do you mean to say that all the mowing machines of the present day are provided with rocking finger bars?

A. I do not know of any that isn't.

X Q. 47. Mention now all the mowing machines of the present day that you know of.

A. The Deering, Walter A. Wood, McCormick, Champion, Buckeye, Osborne, Standard, John P. Manny, N. C. Thompson, Milwaukee, Esterly, Crawford, Minneapolis, Plano, Tiger—that is all I call to mind just now; there may be more.

X Q. 48. Every one of the machines you have named has a rocking finger bar, has it?

A. I think so.

Redirect examination by Mr. BANNING:

285 Q. 1. You have come here to testify under a subpœna, have you not?

A. I did; yes, sir.

A. HART.

JOHN F. STEWARD, a witness produced, sworn, and examined on the part of the complainants, deposes and testifies as follows in answer to questions by Mr. BANNING:

Q. 1. State your name, age, residence, and occupation.

A. John F. Steward; 46 years; Chicago; mechanic.

Q. 2. With whom are you engaged and in what capacity?

A. With William Deering & Co., as mechanical and patent expert.

Q. 3. Are you required in your work to know or do anything in reference to patent claims or suits against William Deering & Co. or in which they are interested; if so, what are your duties in such matters?

A. Those matters are in my charge, and I have solely to do with them, subject only to the president of the company.

Q. 4. How long have you been thus engaged by William Deering & Co. and their predecessors?

A. Since the fall of 1880.

Q. 5. Did you ever know anything about the suit begun October 10th, 1881, against William Deering under the first two claims of the Graham patent No. 74342 sued on in this cause?

A. Yes.

Q. 6. What did you know about it, and what did you have to do with it?

A. I settled it by paying, as I recollect it, five thousand dollars.

Q. 7. What machine was involved or claimed to be an infringement of the Graham patent in that suit?

A. The Warrior mower, as it was then built by William
286 Deering. This machine was built under a license from Frank Bramer, of Little Falls, New York.

Q. 8. Did you personally know or ever meet Frank Bramer, referred to in your last answer?

A. Yes, to both parts of the question.

Q. 9. Did you ever have any conversations or correspondence with Mr. Bramer in reference to settling said suit against William Deering? If so, please state all about the same fully.

A. When the suit was first brought I went to him for aid, and he assured me that he could help us to defend against the Graham patent—as his 1865 patent anticipated Graham's—and that he could carry his invention back several years. My recollection now is that—the license to Gammon & Deering he guaranteed protection; at any rate we depended upon him. He stated to me in 1881, as I recall it, that he feared that Graham would anticipate him, and that if we could settle for a reasonable sum he would advise us to do so; that the Warrior Mower Company, which was building the same machine, had settled or were about to settle or arrange with Graham.

I wished to know of him if the rights he obtained under the Graham patent were not in behalf also of his licensees; he thought they were. I called upon Graham's attorneys and made the settlement as above stated, first investigating the matter as to whether Bramer was liable for the amount or not. Deering paid it, but I have forgotten whether we deducted it from royalties due Bramer or not.

Q. 10. Then are we to understand, or not, that that settlement was made on Bramer's advice, and after you had personally consulted with him in regard to his own operations and their effect as
287 a defense against the first two claims of the Graham patent in suit?

By Mr. THACHER: Question objected to, especially the last part,

as leading and as an attempt to put a special interpretation on what the witness, in his preceding answer, has stated to have done.

A. He advised the settlement on the ground that he had not confidence in his defences—that is to say, he feared that Graham could date back of him.

Q. 11. Did he give any other reason for desiring Mr. Deering to make the settlement?

A. I recall none.

Q. 12. Did he say that he was not in good health and therefore desired the settlement, or anything to this effect?

A. No.

Q. 13. Do you remember of his coming out here personally, shortly after the beginning of the suit against Mr. Deering, to see if a general settlement, including both Mr. Deering and the Plano Manufacturing Co., could not be made?

A. Yes.

By Mr. THACHER: So much of the last question and answer as relates to the Plano Co. objected as hearsay, in relation to a matter to which, so far as it appears, the Plano Co. was not a party, and as relating to matter which is entirely new and not appearing heretofore in this record. Counsel for defendants will therefore claim the right to answer it by testimony for defendants if desired.

Q. 14. What did Frank Bramer do at that time, so far as you know or as he informed you?

By Mr. THACHER: Question objected to so far as it relates to information derived from Bramer.

A. He did not inform me of anything, but came with me to the Honore block and waited in the hall while I consulted with
288 Banning & Banning in regard to the amount necessary for a settlement. He insisted that the amount paid by the Warrior Mower Company should cover us, or, rather, that he supposed that that settlement should cover his licensees.

Q. 15. Do you know whether he called on us personally in reference to making a general settlement of the kind referred to in my Q. 13, or did he inform you by letter or otherwise of his making such a call for such a purpose? If you have any letter from him on this subject please produce and identify the same.

By Mr. THACHER: Same objection as to Q. 13 and its answer.

A. He so informed Deering by letter, dated October 14, 1881, which letter, referring to matters in my charge, was delivered to me. I here produce and identify such letter.

By Mr. BANNING: I here offer in evidence the letter produced by the witness, and the same is as follows.

Counsel for defendants here objects to the counsel for complainants taking up the testimony from the witness and testifying himself, and demands that the letter produced by the witness be offered

in evidence as an exhibit, and objects to any use whatever of the same as evidence unless it is properly put in as an exhibit.

By Mr. BANNING: The notary is requested to mark said letter produced by the witness "Complainants' Exhibit Bramer-Deering Letter," and to here copy the same in the record, and the same is accordingly copied as follows:

289 Arphaxed Loomis, president; W. G. Milligan, treasurer; Frank Bramer, managing agent; Gerrett Drake, financial agent.

Office of the Warrior Mower Co.

Dictated. LITTLE FALLS, N. Y., *Oct.* 14, 1881.

Wm. Deering, Chicago, Ills.

DEAR SIR: I had an interview with Mr. Jones Saturday evening and expected to have seen him here Tuesday or Wednesday of this week, and thought I would not write you until I had seen him, but he has failed to put in an appearance. Banning & Banning asked $15,000 for your past and the Plano's future business. The price I thought too high and more than you would wish to pay; consequently left them without making any arrangements for you or the Plano people. I thought it might be possible that when Jones had thought the matter over sufficiently there might be some arrangement made. For that reason I did not write you as early as I otherwise would have done.

Yours, etc., FRANK BRAMER,
Per A. D. WILSON.

By Mr. THACHER: Letter just offered as exhibit objected to as relating to entirely new matter, and also as unauthenticated.

Adjourned by consent until 2 o'clock p. m., Monday, Aug. 1st, 1887.

MONDAY, *August 1st*—2 o'clock p. m.

Met pursuant to adjournment.

Present: Same as before.

Cross-examination by Mr. THACHER:

290 X Q. 1. You say you settled the suit of Graham against William Deering for five thousand dollars. Did you make the payment of that five thousand dollars yourself?

A. My recollection is that I delivered a check for that amount to Banning & Banning.

X Q. 2. Can you swear positively that you did?

A. I am quite sure of it; can be not more positive than that I made the terms with them myself.

X Q. 3. But you can't say positively that you made the payment for Mr. Deering?

A. I am very sure that I did; that is all that I can say. As I have had many deals with them it is possible that events are mixed in my memory.

X Q. 4. Do you know whether the books of Deering show the payment of this sum of money to Graham or his representatives for settlement of the suit referred to?

A. I have not examined them and cannot be positive, as that does not fall in my department. I can only be positive that I made the settlement.

X Q. 5. What length of time did that settlement cover?

A. My recollection of the matter, aided by papers in my possession, enables me to say that it covered from and including 1879 up to the date of settlement, and a release under the patent for the future during the life of the patent.

X Q. 6. That included, then, all machines built by William Deering or his company from the time he commenced to build for himself until the patent expired, did it not?

A. Yes.

X Q. 7. About how many machines would that include, as near as you can estimate?

Objected to by Mr. Banning, inasmuch as the settlement is not shown to have been made on the basis of any particular number of machines, nor does it appear that the number was in any way disclosed or considered.

291

A. I cannot say, as the number of machines built is something with which I have nothing whatever to do. Mr. Deering's books will, without doubt, show.

X Q. 8. Isn't it a fact, though, that your familiarity with Deering's business is such that you know pretty nearly the number of machines made each year?

A. Yes, as far as self-binders are concerned; but from the fact that mowers, up to within the last five years, have been a secondary part of the business, aside from familiarity with the construction of the mowers put out each year, I can say but little. I wish to not be called upon to give my opinion as to numbers, because it would be purely guess-work, and the number can be correctly determined by referring to Mr. William Deering or his books and those of the company.

X Q. 9. How many of those mowing machines did Deering make in 1879, as near as you can recollect?

By Mr. Banning: Same objection as to cross-question 7.

A. I have no recollection whatever.

X Q. 10. Will you examine the books and bring a statement of the number of machines built each year, commencing with 1879 and extending to the expiration of the Graham 1868 patent?

By Mr. Banning: Same objection; and I desire to make this further statement for the guidance of the witness: So far as the complainants in this suit are concerned, the statement called for may be produced if thought best, but, being now attorneys for Wil-

liam Deering & Co., we suggest that the defendants have no right to inquire into their private business, and the information should not be given to enable these defendants or other manufacturers to use it against Mr. Deering or his company, and in no case should it be given without Mr. Deering's consent or approval. With this instruction the witness may exercise his own pleasure as to what he ought to do.

292

A. I would be pleased to do so, but I have no right to make any examination whatever of Mr. Deering's books and report what they show any more than I would those of any other business man. Although I am, to a certain extent, now concerned with Wm. Deering & Co., the said company have not built any Warrior mowers, unless it be very few. I have no doubt that Mr. Wm. Deering will give the information called for, or his book-keeper, with his permission.

X Q. 11. You make a distinction, then, between "Wm. Deering" and "William Deering & Company," do you?

A. Yes.

X Q. 12. When was the change made to "William Deering & Company?"

A. September 1st, 1883 or 1884, but I think the former.

X Q. 13. And you have no right to the books and papers of "William Deering," if I understand you?

A. None whatever outside of my department.

X Q. 14. Have you a right to any of the papers of "William Deering?"

A. I think not, but with his consent.

X Q. 15. Did the subpœna served on you to appear as a witness for this examination require you to produce the letter which has been offered in evidence and marked "Complainants' Exhibit Bramer-Deering Letter?"

293

A. No. I wish to explain my position in that matter. I have charge of the patent matters of the company and have had those of Mr. Deering. All letters and other papers pertaining to that branch are turned over to me. The letter referred to is one of those in my keeping. I have been urged by Mr. Banning to testify in this matter; have declined to do so repeatedly on the ground that my relations are friendly with both plaintiffs and defendants. He telephoned to me last week, saying that he felt that he would have to call on me in regard to the settlement which I had made with Mr. Graham. I stated to him that I would not come unless obliged to, and he stated that as he thought the matter important he would subpœna me. He asked me to bring any letters or papers that would shed any light on the matter of the settlement. I brought, among others, that which has been offered in evidence, and in order that my action should not be misconstrued I to-day brought all other papers and have permitted both attorneys to look them over. I have stated that I could not meddle with Mr. Deering's books or papers without his consent. I certainly have his consent when matters are turned over to me by him, and I cannot well refuse to testify to any facts when asked. I

know very well that these documents could be called for by proper processes, and I brought them as requested. Those to-day I brought voluntarily in order that the defendants as well as the plaintiffs might have the full facts.

X Q. 16. You have the consent of Mr. Deering, have you, to voluntarily produce papers (addressed to him, but turned over to you or your department) for purposes of evidence in court or elsewhere?

A. By no means. I have no right whatever to use them outside of our business. I had no idea of bringing the letters without his consent. Upon his return from a long absence, the morning of the day my testimony was begun, I stated to him that I was called upon to explain our settlement under the Graham patent,
294 & 295 and that I wished to take the letters and papers to aid me. He had no objection to my doing so, and so said.

X Q. 17. The counsel for complainants in this cause, Messrs. Banning & Banning, are also attorneys for William Deering & Co. in patent matters, are they not?

A. Yes.

X Q. 18. You have talked over with them the matter of this suit of Graham against the Plano Company, have you not?

A. I have talked with them, particularly E. Banning, regarding the Graham patent and the suits brought under it, but our talks have been mainly regarding the suits against Deering and against the McCormick Harvesting Machine Co. Incidentally the suit against the Plano Manufacturing Company was mentioned, but I declined to discuss the matter much with him. Our talks have been almost solely in regard to the positions we each took in the matter of the Graham patent. I wish to add that I am reminded of having stated to counsel for defendants that I had considered the matter of the Warrior mower with Mr. Banning; but my conclusions are not called for by either party, I trust, in accordance with my request.

Redirect examination by Mr. BANNING:

Q. 1. Among the letters you have brought down to-day I find one from Frank Bramer to Gammon & Deering, dated October 15th, 1879. Please look at this letter and state whether you recognize the signature thereto as the genuine signature of Frank Bramer, and all you know about it.

A. I take the signature to be genuine, as I became somewhat familiar with his signature in dealing with him. The letter is one of those filed away by me with other Bramer papers.

Counsel for complainants offers said letter in evidence, and
296 requests the notary to mark it "Complainants' Exhibit Bramer-Gammon & Deering Letter," and to copy it into the record, and the same is accordingly copied as follows:

Arphaxed Loomis, president; W. G. Milligan, treasurer; Frank Bramer, managing agent; Gerrett Drake, financial agent.

Office of the Warrior Mower Co.

LITTLE FALLS, N. Y., *Oct.* 15, 1879.

Gammon & Deering.

GENTS: Enclosed with this find letter from my attorney in regard to the Graham matter. I have also examined the Graham patent of Feb. 11, 1868, and have this to say in regard to it: My original patent of Dec., '65, shows fully and completely the devices claimed in the first and second claims, and my first machine had the same devices. My experiments went back many years before the date of the patent. Whether Graham in his testimony can carry back the date of his invention further than I can remains to be seen. I doubt it. As to the difficulties and poverty which some inventors plead for a reason why they did not proceed more diligently in procuring a patent, I think that I can show that I had my full share of them, and yet during all of that time my experiments, etc., were done in such a manner as not to prejudice my rights. I do not believe Graham can sustain his patent as against manufacturers of the Warrior, and, unless he can be bought for a song, should let him push ahead. The suit could or can be delayed and but little expense made until after the hearing of the McCormick matter, which I have no doubt will knock his patent all to pieces. I shall be in Chicago some time before Jan. 1st and will call upon you. Will you please, at
297 your earliest convenience, fill out blank report mailed you some time since?

Yours, etc., FRANK BRAMER.

Counsel for defendants objects to the letter just offered in evidence as new matter and claims the right to an opportunity to answer the same. Counsel for defendants also objects to the said exhibit letters as offered alone from the letters and papers which the witness says he has brought with him, and here demands that all the letters and papers relating to this Bramer matter, which have been brought here to-day by the witness, be now put in evidence, and gives notice that motion will be made to strike from the record the two exhibit letters already offered in evidence by this witness, unless all the papers referred to above are put in evidence as demanded.

Q. 2. As I understand it, you have shown all these papers which you have here with you relating to the Graham-Deering settlement to the counsel for both parties in this cause, giving to Mr. Thacher as well as myself the privilege of using or offering any of them desired. Is this correct?

A. No; I have shown them to both, but have requested that they be copied into the record rather than filed, and thus taken out of my possession, and I again so request, for the reason that, although we have closed business with Frank Bramer, deceased, his administrators or assigns may not understand the matter, and hence make further claims upon us. If permitted to retain them they will be

safe in a fire-proof vault, and I will cheerfully turn them over at the time of the hearing for the use of the parties.

Q. 3. But, subject to this request, they have been and are as open to be used and offered by one side as the other?

298 A. The three or four brought in accordance with Mr. Banning's request I gave him about ten minutes before my examination began last Saturday; those I have produced to-day I showed Mr. Thacher this afternoon, and he had about the same length of time to consider them, but, as there are many more of them than in the other batch, he had not time sufficient to any more than run them over.

Counsel for complainants hereby consents that, so far as he is concerned, counsel for defendants may offer any or all of the papers produced by the witness, provided that they be offered as a part of the defendants' evidence, and so as to go into their record, and provided also that the same shall be so offered at some convenient time before the hearing.

Counsel for defendants requests counsel for complainants to state whether or not he will offer the rest of the papers referred to, and from which he has made certain selections, and says that he does this simply for the purpose of giving notice of the motion referred to in his objection to redirect question one, if necessary, here upon the record.

Counsel for complainants replies that he will not offer the other papers referred to, except the license from Frank Bramer to Gammon & Deering, which he intends to ask the witness to identify presently, all the other papers being, in his view, immaterial and unimportant. However, as above stated, there will be no objection to counsel for defendants offering them as a part of their record, if they so desire.

Counsel for defendants here gives notice of motion to-morrow morning, Tuesday, August 2nd, 1887, at ten o'clock a. m., before his honor Judge Blodgett, if present, or Judge Gresham, or as soon thereafter as counsel can be heard, to strike from the record

299 the two exhibit letters marked "Complainants' Exhibit Bramer-Deering Letter" and "Complainants' Exhibit Bramer-Gammon & Deering Letter," for the reasons stated in objection following answer to redirect question one, and requests the notary to produce the record of the examination of this witness before him then and there, and requests the witness to leave with the notary the package of letters which he has brought here and testified about to-day, and the notary to produce said papers at the same time with the record.

Q. 4. Please produce and identify, from the papers here in your possession, the license from Frank Bramer to Gammon & Deering, under which Mr. Deering continued to manufacture after the firm of Gammon & Deering was dissolved.

Counsel for defendants objects to the question and to the offering in evidence of the paper referred to therein for the same reasons stated to the last "Exhibit Bramer-Gammon & Deering Letter."

A. I produce the license, which bears date March 7th, 1876, and shows to have been recorded March 24th, 1876, in Liber L 20, page 56, of Transfers of Patents.

Counsel for complainants offers said license produced by the witness in evidence, and the same is marked "Complainants' Exhibit Bramer-Gammon & Deering License."

Counsel for defendants offers the same objection to the exhibit as above given to question four.

Recross-examination by Mr. THACHER:

R. X Q. 1. Did counsel for defendants ever see any of these papers relating to the Bramer-Deering settlement before you showed some of them to me this afternoon, as stated in your answer to redirect question three, except the letter produced by you and offered
300 in evidence last Saturday, and, as to that, did said counsel ever see it before you produced it here in evidence?

A. Not to my knowledge.

R. X Q. 2. Does the package of papers which you have brought here to-day contain all the papers which you or William Deering have or have ever had relating to the Bramer-Deering settlement?

A. They are all that I know of, as far as Bramer was concerned.

Counsel for defendants requests the notary to number the papers of the package delivered to him by witness, to be produced in court under the notice, and to state on the record the number of papers he finds.

JOHN F. STEWARD.

Counsel for complainants offers in evidence the affidavit of Lewis Bramer, sworn to March 20th, 1880, before Elmore Wheaton, justice of the peace, attached to and forming part of the defendant's petition for a rehearing in the suit of Graham *vs.* McCormick *et al.*, under the patent sued on in this cause, filed in the office of the clerk of the circuit court of the United States for the northern district of Illinois, April 19th, 1880, and said affidavit is as follows.

(Counsel for defendants objects to the copying of the paper produced, as counsel for complainants offers above the original affidavit in evidence, which paper is not here to be copied. Counsel also objects to the affidavit as evidence in this cause on the ground that it comes within the decision of his honor Judge Blodgett, heretofore in this cause, that the evidence in said cause, Graham *vs.* McCormick, cannot be used in the present suit between other parties, and for the further reason that no foundation has been laid for the introduction of this affidavit as evidence here by the cross-examination of Lewis Bramer in this cause. At the same time coun-
301 sel for defendants disclaims any objection to the matter of the affidavit, but insists upon the right to examine Lewis Bramer in reference to it. If it is admitted in evidence, counsel for defendants gives notice also of motion in court to-morrow morning to strike from record said affidavit at the same time as motion already noticed is heard.)

EXHIBIT 2.

United States Circuit Court, Northern District of Illinois. In Equity.

HUGH GRAHAM *vs.* CYRUS H. MCCORMICK.

STATE OF NEW YORK, } ss:
Onondaga County, }

Lewis Bramer, of Fabius, N. Y., being duly sworn, says he resides at Fabius, N. Y.; that in 1863 he was present in the field and saw a mowing machine cutting grass at Parker Andrew's place. Said mower did good work, and the next year they were manufactured by his cousin, who was the inventor and patentee, and sold and used largely and have been constantly sold and used since. The cutter bar of the said 1863 mower was secured to a link to vibrate by its attachment to main gearing carriage, and the draft or push rod was secured by a joint to admit of rocking and rolling the cutter bar. Said invention was patented in the United States in 1865.

LEWIS BRAMER.

302 Sworn to before me the 20th day of March, 1880.

ELMORE WHEATON,
Justice of the Peace.

* * * * * * *

AUGUST 3RD, 1887—12 o'clock m.

Said parties met by agreement.
Present: As before.

The court having overruled the defendant's motion to suppress Bramer letters heretofore offered, and advised that Mr. STEWARD be recalled for further cross-examination, he is now so recalled and further cross-examined by Mr. THACHER, as follows:

X Q. 1. Among the papers which you brought here the other day are there not several other letters from Bramer relating to the settlement of the Graham suit besides those which have already been put in evidence?

A. Yes.

X Q. 2. Will you produce all the letters from Bramer to Deering which have a bearing upon that matter of settlement and make them a part of your deposition, and identify them by some mark which you may indicate?

A. Aside from those already introduced, dated Oct. 15, 1879, and Oct. 14, 1881, I find one dated Oct. 13, 1879, signed by Frank Bramer, one of December 31st, 1879, also signed by Frank Bramer, and one dated April 27th, 1881, signed by Frank Bramer, and all in his handwriting. The above letters I have selected and marked "J. F. S. No. 1," "J. F. S. No. 2," and "J. F. S. No. 3."

In the order of their dates said three letters here produced are as follows:

303 Arphaxed Loomis, president; Frank Bramer, managing agent; W. G. Milligan, treasurer; Gerret Drake, financial agent.

OFFICE OF THE WARRIOR MOWER CO.,
LITTLE FALLS, N. Y., *Oct.* 13, 1879.

Gammon & Deering.

GENTS: Yours of 8th inst. I find on my return and haste to answer. My attorney says we have nothing to fear from the Graham patents, and further says you were defeated in the Sprague matter by bad management. Of this, of course, I have no knowledge. I have sent for the Graham patent and shall probably receive it to-morrow. When I do I will examine and write you in full.

Yours, etc., FRANK BRAMER.

OFFICE OF THE WARRIOR MOWER CO.,
LITTLE FALLS, HERKIMER CO., N. Y., *Dec.* 31, 1879.

Wm. Deering.

D'R SIR: I have the testimony of Graham, in which he fixes the date of his invention, and can say to you with assurance that we have nothing to fear from him. You can treat this as confidential at present, except to Graham and his attorney, in case you wish to use it.

Yours, etc., FRANK BRAMER.

304 Arphaxed Loomis, president; Frank Bramer, managing agent; W. G. Milligan, treasurer; Gerret Drake, financial agent.

OFFICE OF THE WARRIOR MOWER CO.,
LITTLE FALLS, N. Y., *April* 27, 1881.

Wm. Deering:

Answering yours of 26th, will say that Mr. Graham's statement that he has been in New York is true, and that he did get the affidavit of one man that he was in the army in 1862 is also correct. That that man did swear that he worked for me on a machine in that year is also correct, and I supposed he did, and it is possible he did, and yet for this reason the party is wholly unreliable, and if Mr. Graham was asked under oath how much he paid the party, directly or indirectly, he would be much embarrassed. That he can show that my affidavits were fraudulent or fraudulently obtained is false, and that he antedates me is also false. Now, in regard to matter between Gammon & Deering and myself, will say that I and my attorneys take a different view of the matter than the one expressed in your letter—one which, perhaps, may agree with your expression to me when I visited you some year or more ago. The protection promised in contract was against infringers of my patent, which I believe I have so far done upon your demand.

Yours, etc., FRANK BRAMER.

I presented 3 sure, and I think 4, affidavits, and all, except the one mentioned, reliable men.

Redirect examination by Mr. BANNING:

R. D. Q. 1. Please look at the last part of your answer to cross-question 18, and state whether you have not also considered the matter of the Warrior mower with Mr. Thacher as much as you have with myself, or more.

A. I think about the same.

JOHH F. STEWARD.

305 Testimony taken on the part of the complainants this 10th day of August, 1887, before Benjamin J. Shore, notary public in and for Onondaga county, New York, at the office of Messrs. Hey & Gibbs.

Present: Thomas A. Banning, Esq., of counsel for complainants, and H. H. Talcott, Esq., of counsel for defendants.

JOHN G. K. TRUAIR, a witness produced, sworn, and examined on the part of the complainants, deposes and testifies as follows:

Q. 1. State your name, residence, and occupation.

A. John G. K. Truair; Syracuse, N. Y.; printer and publisher.

Q. 2. With what house are you connected at the present time?

A. Syracuse Journal Company.

Q. 3. How long have you been connected with that company?

A. Since its organization, in August, 1885.

Q. 4. What was the name of its predecessor?

A. Its immediate predecessor was the firm of Smith & Bruce. I was not a member of that firm.

Q. 6. Were you connected with the Journal office in 1867 and along about that time?

A. I was.

Q. 6. State whether there was published at the Journal office any gazetteer and business directory of Onondaga county, N. Y., for 1868 and '69.

A. There was.

Q. 7. Look at this volume which I now show you, marked on outside in gilt letters "Onondaga County, 1868-'9, Directory," and state whether it is one that was published by the Journal office, as inquired of in question 6.

A. I should think it was; it appears to be; it has our imprint.

Q. 8. Do you see anything about it to make you doubt that it is one published by your house—the Journal office—as I have inquired of?

A. I do not.

306 Q. 9. What year was that directory published?

A. I should think 1868; our books would show.

Q. 10. The imprint gives the year as 1868, does it not?

A. It does.

Q. 11. Is there anything to make you doubt the correctness of that date as the one in which the directory was published?

A. There is not.

Q. 12. About what number of these directories were published, if you remember?

A. I cannot remember.

Q. 13. Did you know the compiler, Hamilton Child?

A. I did.

Q. 14. Has he not for a number of years been engaged in the business of compiling directories similar to this Onondaga County Directory?

A. He has.

Q. 15. How has this Onondaga County Directory been regarded, as to the correctness and reliability of its statements, if you know?

Objected to by defendant's counsel as immaterial.

A. I do not know. I cannot tell.

Q. 16. Do you know whether Mr. Child, in getting up this directory, canvassed for it and inquired of parties before stating the history of their business or other similar facts?

Objected to by defendant's counsel as improper.

Q. 17. Opposite page 39 of this directory we find a full-page cut or illustration of a mowing machine in operation, with the words "Young Warrior mower, Bramer & Pierce, manufacturers, Fabius, N. Y.—see advertisement, page 55," do we not?

Objected to by defendant's counsel as immaterial.

A. There seems to be such a cut there.

307 Q. 18. Page 55 appears to be a full-page advertisement of the Bramer & Pierce Agricultural Works, etc., does it not?

Objected to by defendant's counsel as secondary evidence, the book itself being the best evidence of what it contains.

A. Yes.

Q. 19. Page 63 of the directory appears to be a notice or short account of the village of Fabius, N. Y., does it not, except a few lines at the bottom beginning the history of Apulia?

Same objection by defendant's counsel.

A. Yes, sir.

Counsel for complainants offers page 63 of said directory, or rather that portion of it which relates to the village of Fabius, in evidence, with the statement that the whole directory will be produced at the hearing of the above cause or for the use of the defendants as they may desire, and requests the notary to write into the record said 63rd page, as follows:

"Fabius (p. v.) is situated on a small stream a little northeast of the center of the town, and contains four churches, two schools, two hotels, a furnace and a machine shop, a tannery, a grist-mill, two

manufactories of agricultural implements, and several other mechanic shops and stores.

"Among the manufactories of Fabius the agricultural works of Bramer & Pierce, located in the east part of the village, deserve particular notice. In 1838 David Bramer, father of one of the present proprietors, built a small shop and commenced the manufacture of horse-powers, threshing machines, and agricultural implements generally. As his business increased he enlarged his works, and associated with him, at different times, all his sons, the old
308 gentleman remaining at the head of the firm until 1861, when Frank Bramer bought out the business, stock, etc., and continued the manufacture until 1863, when he invented and built a mowing machine named the 'Young Warrior,' which has since become deservedly popular. Many difficulties were encountered in perfecting and introducing to the public this mower, arising from the persistent and determined opposition of agents and others interested in the sale of other machines; but notwithstanding their efforts the 'Young Warrior' has gradually worked its way into public favor, and now it is ranked as one of the best, if not the very best, mower in use. In Dec., 1865, the old shop, with all its additions, was burned, and a new one built in 1866. The new shop is 78 feet by 30 and three stories high, with an L, 24 by 40 feet, and the same height of the main building. During the past winter quite extensive repairs and improvements have been made in the building and machinery in order to meet the demand for the mower, which is the leading article of manufacture. The number of hands employed in the establishment is from eighteen to twenty-five, and the value of the manufactures from $25,000 to $30,000 annually. In the fall of 1867 Mr. E. D. Pierce purchased a half interest in the works, and the firm is now known as Bramer & Pierce. Both members of the firm are young men, who are determined to increase the reputation already attained of the 'Young Warrior mower' and of other articles of their manufacture, and also to enlarge their works, as necessity may require, to meet the ever-increasing demand."

Counsel for defendants objects to this offer of page 63 because it is hearsay evidence; secondly, because it is not sufficiently authenticated; thirdly, because it is secondary evidence of the statements it purports to contain; fourth, because it is immaterial, irrelevant, and otherwise improper.

309 Cross-examined by defendant's counsel:

X Q. 1. You do not know of your own knowledge, do you, whether the statements made in regard to the industries of Fabius on page 63 of said directory are true?

A. I do not.

JOHN G. K. TRUAIR.

Seal and certificate of official character of notary waived by counsel.

Evidence taken on the part of the complainants this 2nd day of August, 1887, at the offices of Hey & Gibbs, Nos. 10–14, Third National Bank building, Syracuse, New York, before H. P. Denison, a notary public in and for Onondaga county, New York, pursuant to the notice hereto annexed.

Present: C. H. Duelle, on the part of the complainants; no appearance for defendants.

GEORGE W. HEY, a witness produced, sworn, and examined on the part of the complainants, deposes and testifies as follows:

Q. 1. Please state your name, age, residence, and occupation.

A. George W. Hey; past 38 years; Syracuse, New York; patent lawyer.

Q. 2. Do you know King H. C. Preston, of Syracuse, and how long have you known him?

A. Yes; since last fall or winter.

Q. 3. State whether or not you ever had any conversation with him about the Alvaro B. Graham patent and the suit of Graham against The Plano Manufacturing Company and others.

A. Yes; in March or April of the present year Mr. Preston called at my office and talked with me about the Graham patent referred to.

310 Q. 4. If he had such conversation with you state the same fully, and particularly what Mr. Preston said therein.

A. Mr. Preston desired to know of me if I could suggest some way whereby he could get some pay for certain information which he said he had which would make strong evidence of prior use against the Graham patent referred to. He said he had testified previously for the Plano Manufacturing Company in this case, and that if he could sell them in some way the information and evidence so as to get enough out of it to pay him for his time and trouble he could furnish them with some good evidence of prior use, but said he did not care to go into it without he could make something out of it.

Held open by written request of Coburn & Thacher, counsel for defendants.

GEORGE W. HEY.

Sworn to before me this 22nd day of August, 1887.

H. P. DENISON,
Notary Public, Syracuse, N. Y.

311 United States Circuit Court, Northern District of Illinois. In Equity.

ALVARO B. GRAHAM and HUGH GRAHAM

vs.

THE PLANO MANUFACTURING COMPANY *et al.*

Pursuant to notice hereto attached met at the offices of Coburn and Thacher, Nos 52 to 59 Ashland block, Chicago, Illinois, this 19th day of October, A. D. 1885, before Leonard Watson, notary public.

Present: John M. Thacher, Esq., of Coburn & Thacher, on the part of defendants, and Ephraim Banning, Esq., on the part of complainants.

Whereupon the following proceedings were had:

GEORGE G. HUNT, the first witness produced on behalf of the defendants, being first duly sworn, deposes and says in answer to interrogatories propounded to him by JOHN M. THACHER, counsel for defendants:

Int. 1. Please state your name, age, residence, and occupation.

Ans. My name is George G. Hunt; age, 53; residence, Bristol, Kendall county, Illinois; occupation, mechanic.

Int. 2. What experience have you had in connection with
312 machinery generally, and mowing and reaping machines particularly, and also with inventions and patents for inventions?

Ans. My experience commenced with a preparatory course of study fitting me for a civil and mechanical engineer, after which I entered practically into mechanics about the year 1845, since which I have been continuously engaged in the same line of business, the various branches of which have been organ-building, stove-making, including practical pattern-making and drawing for the same; also steam-engine building, of which I was foreman in railroad shops; car-building and locomotive-building and repair. In the same shop I was master mechanic for both branches, namely, locomotive and car department. This was at Bridgeport, Connecticut, in the employ of the Housatonic railroad; afterwards in the same capacity for the Wabash Company, at Quincy, Illinois; afterwards as inventor and manufacturer of the first successful base-burner soft-coal stove in this city (Chicago); afterwards in the employ of A. H. Andrews & Company, as superintendent of motive power and machines; afterwards as inventor for Burdett, Smith & Company, stove manufacturers, Troy, New York. Before engaging with either A. H. Andrews & Company or Burdett, Smith & Company I was employed at various times at Plano, Illinois, in working upon harvesting machines, but not continuously. After my connection with Burdett, Smith & Company had ceased I again engaged in the harvester business, in which business I have since been continuously occupied. My early education, which included a scientific knowledge of the principles and use

of machines, has enabled me to command a comparatively
313 large salary and secured me a leading position in whatever I have been employed. My position for the last few years up to a recent date has been that of master mechanic for the Plano Manufacturing Company, at Plano, Illinois. My experience in relation to patent matters has been a long one, commencing in 1855, the date of my first patent for organs. Since then I have taken out patents in my own name and for my own inventions to the number of forty (40), as near as I can recall, which were for various purposes, but latterly principally for harvesters or mowing machines. I have also obtained patents for others, possibly to the number of one hundred, for which I have prepared the specifications and most of the drawings. I have also testified in several patent cases as mechanical expert.

Int. 3. Are you familiar with the history of mowing machines in this country for a number of years past; and, if so, for about what time back?

Ans. Yes; I am familiar with the history of mowing machines and inventions relating thereto since 1825; practically since 1872, and from the reports of the Patent Office and of the patents themselves since 1825.

Int. 4. What practical experience have you had personally in the manufacture and operation of mowing machines?

Ans. I have had the sole charge of the drawings and patterns and direction of any and all changes which have ever been made by the company in whose employ I now am, and have always taken the mowers into the field myself and tested them personally, not only the mowers made by said company, but various other
314 mowing machines which from time to time have been sent to Plano to be submitted to the inspection of said company preparatory to manufacturing the same. I have seen all of the leading mowing machines in use in the field for the last four or five years.

Int. 5. Have you examined and do you understand the patent of A. B. Graham, No. 74342, dated February 11, 1868, on which this suit is brought? If so, please explain to what part or parts of the machine the first and second claims of this patent relate in a general way.

Ans. I have examined said patent and think I understand the same. The claims mentioned relate to the main frame of a harvester and the finger bar of the same and the means by which it is connected to the frame, and have for their object the adaptation of the finger bar to follow the surface of the ground over which the machine may pass in use, so that the finger bar may rise and fall or be rocked forward or backward.

Counsel for defendants here offers in evidence Patent Office copies of certain letters patent of the United States, as follows:

No. 12044, to Cyrenus Wheeler, Jr., December 5, 1854, improvement in grain and grass harvesters. The same is marked "Defendants' Exhibit Wheeler 1854 Patent."

No. 12367, to C. Wheeler, Jr., February 6, 1855, improvement in grain and grass harvesters. The same is marked "Defendants' Exhibit Wheeler 1855 Patent."

315 No. 13523, to Jonathan Haines, September 4, 1855, improvement in grass harvesters. The same is marked "Defendants' Exhibit Haines Patent."

No. 15160, to C. Aultman and L. Miller, June 17, 1856, improvement in mowing machines. The same is marked "Defendants' Exhibit Aultman and Miller Patent."

No. 15507, to Ephriam Ball, August 12, 1856, improvement in mowing machines. The same is marked "Ball 1856 patent."

No. 17945, to C. Tinker and J. A. Sprague, August 4, 1857, improvement in harvesters. The same is marked "Defendants' Exhibit Tinker and Sprague Patent."

No. 18141, to George C. Dolph, September 8, 1857, improvement in mowing machines. The same is marked "Defendants' Exhibit Dolph Patent."

No. 18173, to C. M. Lufkin, September 8, 1857, improvement in harvesters. The same is marked "Defendants' Exhibit Lufkin Patent."

No. 18788, to E. Ball, December 1, 1857, improvement in mowing machines. The same is marked "Defendants' Exhibit Ball 1857 Patent."

No. 20180, to Lewis Miller, May 4, 1858, improvement in harvesters. The same is marked "Defendants' Exhibit Miller Patent."

316 No. 24063, to W. S. Stetson and R. F. Maynard, May 17, 1859, improvement in harvesting machines. The same is marked "Defendants' Exhibit Stetson and Maynard Patent."

No. 25697, to David Zug, October 4, 1859, improvement in harvesters. The same is marked "Defendants' Exhibit Zug Patent."

No. 25797, to E. Ball, October 18, 1859, improvement in harvesters. The same is marked "Defendants' Exhibit Ball 1859 Patent."

No. 26091, to G. E. Chenoweth, November 15, 1859, improvement in harvesters. The same is marked "Defendants' Exhibit Chenoweth 1859 Patent."

No. 27617, to G. E. Chenoweth, May 27, 1860, improvement in harvesters. The same is marked "Defendants' Exhibit Chenoweth 1860 Patent."

No. 27608, to Lamont and Grojean, March 27, 1860, improvement in mowing machines. The same is marked "Defendants' Exhibit Lamont and Grojean Patent."

No. 31686, to C. Wheeler, Jr., March 12, 1861, improvement in reaping and mowing machines. The same is marked "Defendants' Exhibit Wheeler 1861 Patent."

317 No. 33691, to O. Billings, November 12, 1861, improvement in harvesters. The same — marked "Defendants' Exhibit Patent."

No. 31973, to E. F. & J. Herrington, April 9, 1861, improvement in mowing machines. The same is marked "Defendants' Exhibit Herrington Patent."

No. 34545, to S. S. Bartlett, February 25, 1862, improvement in

driving wheel axle of the rocking piece upon its pivot, the finger bar upon its hinge connecting it with the rocking piece aforesaid, allows the finger bar to adjust itself to any surface, however irregular or uneven, over which the machine may pass. The jointed rod before mentioned which connects the finger bar with the front cross-bar of the machine is also provided with a swivel joint which connects it with the finger bar. The position of this rod being attached to a vertical arm above the finger bar, say to a standard or arm, serves the purpose of holding the finger bar and cutters down to their work or from rocking backward too easily. I have made a model from the drawing and specification to illustrate so much thereof as I have just described, and I here produce this model, that it may be offered in evidence.

Counsel for defendants here offers in evidence the model produced by the witness, and the same is marked " Defendants' Exhibit Wheeler 1855 Model."

The next exhibit is the Haines patent, granted 1855, in which I find shown and described a main frame mounted upon the axle of two driving wheels, said frame being provided with a stiff tongue or one rigidly attached to the same. A finger bar to which is rigidly attached an extension piece is connected to said main frame
322 by two side rods, one upon each side of the frame. These side rods are connected to the front cross-bar of the main frame by swivel or hook-and-eye joints and at the rear end said rods are connected by similar joints to the finger bar and extension piece. A transverse rod having a hook at each end is connected to the finger bar by a staple or eye through which one of the hooks of said rod passes and to the frame by a similar connection. This machine is what is known as a rear-cut machine. By means of the transverse rod above described the finger bar is held in its proper working position or from swinging sidewise. The connection of the finger bar to the main frame by means of the side rods provided with the joints as described permits the finger bar to rise and fall at either or both ends or to rock forward or backward within limits, so that in passing over the surface of rough or uneven ground the finger bar can adjust itself freely to said surface. I have made a model from the drawing and specification to illustrate so much thereof as I have just described, and I here produce this model, that it may be offered in evidence.

Counsel for defendants here offers in evidence the model produced by the witness, and the same is marked " Defendants' Exhibit Haines' Model."

Adjourned until 2 p. m.

2 P. M.

Met pursuant to adjournment.
Present: As before.

323 Mr. HUNT continues his deposition in answer to int. 7:

The next exhibit is the Aultman and Miller patent of 1856,

which is a type of machines the construction of which differs from others heretofore known. In this machine, which is a rear-cut, stiff-tongue one, a main frame, to which a tongue is rigidly attached, is mounted or pivoted on the axle of the driving wheels. To the under side of the rear end of the frame is rigidly attached a plate which has two hinges, the pivots of which lie in the line of draft of the machine. This plate is connected by the hinges aforesaid to the inner end of a coupling bar. The outer end of said coupling bar is connected to a shoe by two similar hinges. To this shoe the inner end of a finger bar is rigidly attached. By means of the above-described double-hinged coupling bar which connects the finger bar to the main frame the finger bar can rise or fall at either or both ends independently of the motion of the main frame, thus enabling it to conform to the surface of the ground, however uneven the same may be. By means of the hinged joints between the coupling arm and the shoe the outer end of the finger bar can be raised so that the bar can be carried in a vertical position upon the main frame when not in use. I have made a model from the drawing and specification to illustrate so much thereof as I have just described, and I here produce this model, that it may be offered in evidence.

Counsel for defendants here offers in evidence the model produced by the witness, and the same is marked "Defendants' Exhibit Aultman and Miller Model, 1856."

324 The next exhibit which I take up is the Ephraim Ball patent of 1856. This patent describes and shows a type of machine known as the "drag-bar machine." A main frame, to the front end of which a tongue is rigidly attached, is mounted upon the axle of two driving wheels. To the under side of the rear end of the main frame is loosely hinged the inner end of a coupling bar, the outer end of which is connected to a finger bar by a hinged joint in such a manner as to allow the outer or grass end of the finger bar to rise or fall, turning upon said joint. A drag bar is connected to the front cross-bar of the main frame of the machine by a two-way or swivel joint. This drag bar extends backward underneath the inner or stubble end of the finger bar At this point the finger bar is rigidly attached to the drag bar. By means of the coupling bar and drag bar, which are attached as aforesaid to the main frame of the machine, and the rigid attachment of the finger bar to the drag bar the proper transverse position of the finger bar in relation to the main frame is maintained. The swivel joint which connects the front end of the drag bar with the main frame admits of the outer end of the finger bar and the drag bar itself of vibrating upon the longitudinal axis of said joint, while the transverse axis of said joint admits the rear end of the drag bar and finger bar to rise and fall independently of the motion of the main frame. The combination of the swivel-jointed drag bar with the main frame, the double-hinged coupling bar and finger bar, in the manner as described allows the finger bar to conform freely to the surface of the ground over which the machine may pass, and the swivel joint at the

325 front end of the drag bar allows the finger bar with the drag bar to be turned up into a vertical position and carried on the main frame when not in use. I have made a model from the drawing and specification to illustrate so much thereof as I have just described, and I here produce this model, that it may be offered in evidence.

Counsel for defendants here offers in evidence the model produced by the witness, and the same is marked "Defendants' Exhibit Ball 1856 Model."

The next exhibit I take up is the Tinker and Sprague patent, 1857, which shows and describes a front-cut machine, in which a main frame, provided with a rigid tongue, is mounted upon the axle of the driving wheels and supported in the rear by a castor wheel. The rear cross-bar of the main frame is extended outwards on the grass side of the machine, and to the front side of this extension are hinged the rear ends of two push bars in such a manner that the front ends of the same may play freely up or down. The front ends of said push bars are each connected to a finger bar by staples passing through said bars near the ends of the same. An eye or staple at the inner end of the finger bar serves as a hinge to which the outer end of the coupling bar, the opposite end of said coupling bar being connected to the under side of the main frame, at or near the front left-hand corner, by hook and eye, joined. A short distance in the rear of the finger bar are two ground wheels, one at either end of the finger bar.

Upon the axis of said wheels are pivoted two bent levers, one
326 arm of each of which extends forward from the wheels. The front ends of these levers are, respectively, pivoted to and near the front ends of the push bars before mentioned. To the vertical arms of said bent levers are pivotally connected the front ends of two longitudinal rods, which extend backward over the rear extension piece of the main frame. A rock shaft is mounted upon this extension piece of the main frame in bearings, which admit said shaft to be rocked forward or backward. Upon the inner end of this rock shaft is pivoted a hand lever, to which is connected the rear end of the inner longitudinal rods. A short distance from the lever described is another lever, rigidly attached to the rock shaft itself, and at the outer end of the rock shaft is an upwardly projecting arm, rigidly attached to said shaft, and to said arm the rear end of the outer longitudinal rod is pivotally connected. By operating the inner lever, moving it backwards by means of the connecting rod—bent lever—the inner end of the finger bar may be raised, and by moving the lever forward movements are, of course, reversed. By moving the lever which is rigidly attached to the rock shaft the movements of the outer end of the finger bar will correspond to those made by the inner end of the finger bar through the medium of the first lever described. By operating both levers at the same time the whole finger bar is raised bodily. The front ends of the guard fingers are prevented from tipping downwards and digging into the ground by projections on the front ends of the push bars, which extend downwards from the push bars against the heels or rear ends of the

shoes. The finger bar, however, and guard fingers are free to
327 rock upwards, limited only by the weight of the cutter bar and guard fingers, which is generally found sufficient to hold the bars in their proper working position, but will allow the finger bar to rock upwards in passing over stones or other obstructions. By means of the above-described devices the finger bar, when in use, is free to rise and fall at either end, and can also rock forward or backward, limited in its forward motion as described, and is free to conform to the surface of the ground, however uneven said surface may be. The peculiar construction of all the joints connecting the finger bar to the main frame by the push bars and coupling arm before mentioned admits of all of the movements required by the finger bar to be made without cramping or binding of the parts. I have made a model from this patent and here produce it.

Counsel for defendants here offers in evidence this model produced by the witness, and the same is marked "Defendants' Exhibit Tinker & Sprague Model."

The next exhibit which I take up is the Dolph patent, 1857. This represents a rear-cut, stiff-tongue machine, the main frame of which is mounted upon the axle and drive wheels, with the under side of the rear end of the frame *is* loosely pivoted to the inner end of the coupling bar. The opposite end of this coupling bar is hinged to the rear end of a drag bar. This drag bar extends forward on the grass side of the machine, and at its front end is connected by a two-way or swivel joint to a sliding piece, which moves in a vertical guide. This guide is rigidly attached to the front cross-bar
328 of the main frame. A bent lever is pivoted to the main frame over the drag bar, one arm of which projects forward and is pivotally connected to the sliding piece before mentioned. The other arm of the lever extends backward within reach of the driver. The inner end of the finger bar is rigidly attached to the rear end of the drag bar at or nearly in line with the coupling arm. By means of the above described—of the double-hinged coupling arm, the swivel-jointed drag bar, with the main frame to which they are attached—the finger bar is free to rise and fall and thus adapt itself to follow irregularities of the surface over which the machine may pass. This swivel joint at the front end of the drag bar and the hinged joint between the drag bar and coupling arm allow the finger bar to be turned up into a vertical position by the side of the frame, where it can be carried when not in use. By means of the bent lever before mentioned and the sliding piece to which the front end of the drag bar is attached the finger bar may be rocked so that the points of the guard shall incline upward or downward as desired. I have made a model from this patent and here produce it.

Counsel for defendants here offers in evidence this model produced by the witness, and the same is marked "Defendants' Exhibit Dolph Model."

The next exhibit which I now consider is the Lufkin patent,

1857, which shows a rear-cut, stiff-tongue, drooping-frame machine, in which a frame is pivoted at its forward end on the axle of
329 the driving wheel and the rear end of which trails along near the ground. A finger bar having an extension which passes in the rear of the machine to about the center of the frame thereof is attached to the rear portion of the trailing frame by a hook which is attached to said frame and the hook which passes through a hole in the front part of the extension of said finger bar near the end thereof. A drag bar is pivoted upon the grass side end of the driving-wheel axle. This drag bar extends backward to the finger bar, where it hooks, and is provided with a hook which passes through a hole near the front edge of the finger bar. A bent lever is attached to the inner end of the finger bar extension and extends forward and upward at about a right angle to the finger bar. A curved standard is rigidly attached to the drooping frame in such a manner that the lever may be locked to the same in different positions. By means of the trailing frame, the pivoted drag bar, and the hooked or hinged connections between said drag bar, drooping frame, and finger bar, the finger bar is free to adjust itself in conformity with the surface over which the machine may pass. By the use of the lever as described, attached to the finger bar, the finger bar may be rocked backward or forward and fastened in any desired position. The looseness of the hooked joints admits of the finger bar being raised at either end or of having a winding or twisting motion as well as a rocking motion. I here produce a model which I made after this patent showing the parts mentioned above.

330 Counsel for defendants here offers in evidence the model last produced by the witness, and the same is marked "Defendants' Exhibit Lufkin Model."

I will now consider the Ball 1857 patent, which is substantially the same in its general features as the Ball 1856 patent, which I have already explained. In this patent, however, the drawings of a complete machine are shown; also the improvements upon the former patent, to which I will now refer. The improvement to which I refer consists in the widening of the rear end of the drag bar only. The improvements relate only to those parts which have been illustrated and shown or described in the former patent, the swivel joint at the front end of the drag bar, the loose pin joints connecting the coupling bar with the main frame, and finger bar being the same, which admits the finger bar to conform to uneven surfaces over which the machine may pass. I have no model of this patent.

I pass to consider the Miller patent of 1858, which describes and shows a front-cut, stiff-tongue machine, the main frame of which is mounted upon the driving-wheel axle. To the under side of the front part of the frame of this machine is hinged the inner end of the coupling bar. This coupling bar extends outward towards the grass side of the machine and at its outer end is hinged to a shoe. To this shoe a finger bar is rigidly bolted. A brace or push bar is attached to its forward end, to the coupling bar, and the rear end to

the under side of the rear of the frame. The attachment of
331 this push bar to the frame is a hinge, the axis of which coincides with the axis of the hinge on the inner end of the coupling bar, thus allowing the outer end of the coupling bar to rise and fall and turn upon said hinges without cramping. By the use of the above-described hinged finger bar, hinged coupling bar, hinged brace, connected as described to the main frame, the finger bar can rise and fall at either end and adjust itself to uneven surfaces over which the machine may pass in use. The principle of construction in this machine is substantially the same as that shown and described in Aultman and Miller patent of 1856, with the addition of a brace to the hinged coupling arm, the brace being hinged to permit the coupling arm to vibrate. I here produce a model of this Miller machine.

Counsel for defendants here offers in evidence this last model, and the same is marked "Defendants' Exhibit Miller Model."

Further taking of testimony here adjourned until Wednesday, October 21st, 1885, 10 a. m.

WEDNESDAY, *October* 21, 1885—10 a. m.

Met pursuant to adjournment.

Present: As before.

Examination of Mr. HUNT resumed:

The next exhibit which I take up for consideration is the Stetson and Maynard patent, No. 24063, 1859. This patent describes and shows a rear-cut machine, in which the tongue is rigidly attached to a frame pivoted on the axle of the driving wheels. A
332 trailing frame is pivoted at its forward end upon the same axle. At the rear end of this trailing frame a coupling bar is pivoted in each side piece of said frame and at right angles thereto. Upon the end of this coupling bar is hinged a finger bar in such a manner that the outer end of the finger bar can rise and fall freely. At a point on the coupling bar between the pivots of the same is a rigidly attached lever arm or lever projecting upward and forward within reach of the driver. By means of the trailing frame and the hinged finger bar attached thereto by the coupling arm, as described, the finger bar can freely adjust itself to the surface of the ground over which the machine may pass, whether uneven or inclined. By means of the hand lever aforesaid the finger bar and coupling arm can be rocked axially, so that the points of the guard fingers incline upward or downward as desired. I also produce a model made after this patent.

Counsel for defendants offers in evidence the model produced by witness, and the same is marked "Defendants' Exhibit Stetson & Maynard Model."

The next exhibit which I take up for examination is the Zug patent, No. 25697, 1859, which illustrates a stiff-tongue, rear-cut machine, in which a main frame is pivoted on the axle of the driv-

ing wheels on the under side of said frame near the rear left-hand corner thereof. The inner end of a coupling bar is pivotally attached in such a manner that it can rock upon said pivot forward or backward, and also that the outer end of said bar can freely rise and fall. The outer end of this coupling bar
333 is connected to a shoe by means of a hinged joint; a branch of said coupling arm is also connected to the shoe by a similar hinge in such a manner that the axes of the hinges are in line with each other. The inner end of a finger bar is rigidly attached to the shoe in line with the coupling bar aforesaid. On the grass side of the machine and near its right-hand corner the front end of a drag bar is connected by a swivel joint. The rear end of said drag bar is connected to the outer ends of the coupling arm by loosely pivoted joints in such a manner that the finger bar and shoe and coupling arm can rock slightly without interfering with or cramping the drag bar. A transverse arm is hinged upon the pivot of the hinge of the branch of the coupling bar, and lies across and above the drag bar. A staple embraces this arm and passes through — bar, where it is fastened, so that by lifting upon this transverse arm the drag bar is thereby raised. A cord or chain is connected at the lower end to said transverse arm and passes upward and over a segment of a sheave. To the side of this sheave a lever is attached, standing in a vertical position and having a projection upon its side which catches into a notched plate, which holds it in different position, as desired. By means of the above-described devices the finger bar is free to conform to the surface of the ground over which the machine may pass, and the finger bar may also be raised to a vertical position for transportation. By means of the rocking and lifting lever described the finger bar may be rocked axially within limits, or the coupling arm, finger bar, and the rear end of the drag
334 bar may be raised bodily to pass obstructions, etc. I also produce a model made after this patent.

Counsel for defendants offers in evidence the model produced by witness, and the same is marked "Defendants' Exhibit Zug Model."

The next exhibit is the E. Ball patent, No. 25797, 1859. This patent describes and shows a rear-cut machine; a main frame, to which is rigidly attached a tongue, is mounted on two driving wheels. To the front right-hand corner of said frame a drag bar is attached by a universal joint. This drag bar extends back to the rear of the machine. To the rear end of the machine a rocking arm is hinged so that it rests upon the drag bar. The front end of this arm is tapered off, and a thread is cut on the same. This portion of the arm passes through a fixed guide, which is rigidly attached to the drag bar. To this guide the front end of the said rocking arm may be clamped for the purpose of holding it in any desired position. It is evident that a bolt may be used which passes through the said guide and screwing into the end of said arm instead of the before-mentioned device. The inner end of the finger bar is rigidly attached to said rocking arm. To this rocking arm is attached the outer end of a coupling bar by a loose pin joint.

The opposite end of said coupling arm is attached to a pendant at the rear end of the frame by means of a universal joint. A rock shaft is mounted on the rear cross-piece of the main frame, at the inside end of which is a hand-lever for the purpose of rocking said shaft.

335 The outer end of the shaft, which is immediately over the rocking shaft aforesaid, is a sheave rigidly attached to the shaft. A cord or chain having one end attached to the sheave passes over the sheave and is connected at its lower end to the front portion of the rocking arm. By means of the lever and rock shaft and connecting chain the rocking arm can be readily raised or lowered at the front end, thereby rocking the finger bar and cutter forward or backward. By means of the clamping screw at the forward end of the rocking arm the finger bar may be set at any desired angle required. By means of the universally jointed drag bar, swivel-jointed coupling bar, attached as described to the main frame the finger bar is free to rise and fall at either end, independent of the movement of the main frame, and can adjust itself freely to uneven surfaces over which it may pass. The finger bar may be turned up into a vertical position, turning in this case upon the universal joint at the front end of the drag bar and the joint at the outer end of the coupling arm. I here produce a model made after this patent.

Counsel for defendants offers in evidence the model produced by the witness, and the same is marked "Defendants' Exhibit Ball 1859 Model.

The next exhibit is the Chenoweth patent, No. 26091, 1859. This shows a rear-cut drooping machine. In this machine the finger bar is attached by a universal joint directly to a drooping main frame, which is pivoted near the forward part on the axle of the driving wheels. By this arrangement the rear portion of

336 the machine trails along near the ground, carrying the finger bar with it. The universal joint allows the finger bar to rise and fall at its outer end or to rock axially. This universal joint also allows the finger bar to be turned up and folded on the frame, or it may be turned backwards and supported on the end of the driving-wheel axle outside the wheel. The trailing frame and universal joint between it and the finger bar allows the finger bar to conform freely to uneven surfaces over which the machine may pass. I here produce a model made after the patent.

Counsel for defendants offers in evidence the model produced by the witness, and the same is marked "Defendants' Exhibit Chenoweth 1859 Model."

The next exhibit which I take up for consideration is the Chenoweth patent, No. 27617, 1860. This patent shows and describes a rear-cut machine in which a trailing frame is pivoted at its forward part upon the axle of the driving wheels. To the rear cross-bar of this frame is pivoted a forked bar, which extends backward from said frame. In the forks of this bar a shaft is pivoted parallel to the driving-wheel axle. The ends of this shaft project upon

each side of the forks of the bar and serve to attach braces, the said braces extending diagonally forward and connected to the corners of the trailing frame. Upon the before-mentioned shaft and midway between the forks within which it is mounted is an arm at right angles to said shaft and projecting rearward from the same. Upon this arm is pivoted the inner end of a coupling bar, the outer end of which is bolted to a
337 shoe. To this shoe and in line with the coupling bar is attached a finger bar. At the front end of the shoe is a swivel joint. To this joint the rear end of the chain is attached. Said chain passes forward to the end of the driving-wheel axle, outside of the wheel, where the chain is attached by a second or another swivel joint, where it is attached to the axle. Between the shoe and the inner end of the bar is attached the rear end of a second chain, which passes forward to the left-hand rear corner of the trailing frame, where it is also attached. The chains in this case perform the services of the drag bar in the Ball machine. It will be seen on examination that the shaft which is mounted in the forked bar and provided with a pivot at right angles with the same and upon which the coupling bar turns forms a universal joint which permits the outer end of the finger bar to rise and fall freely, and also permits said bar to rock axially. The combined movement of the trailing frame on the axle of the driving wheel and of the coupling bar upon the universal joint described permits the finger bar to rise and fall freely at either end, the chain being provided with swivels also, preventing any binding or cramping in said operations. I here produce a model made after the patent.

Counsel for defendants offers in evidence the model produced by the witness, and the same is marked "Defendants' Exhibit Chenoweth 1860 Model."

The next exhibit which I take up is the Lamont & Grojean
338 patent, No. 27641, 1860. This shows a center-cut machine, in which the finger bar is connected by two hinged joints to a two-armed connecting piece or coupling bar, which is also hinged by two pivot joints to a rocking frame, which is pivoted on the driving-wheel axle. A main frame, to which a tongue is rigidly connected, is also mounted on the axle of the driving wheel. Fixed guides attached to the main frame and embracing the side pieces of the rocking frame serve the purpose of keeping the said rocking piece in its proper working position. A lever is attached to the rocking frame for the purpose of adjustment. By the use of the foresaid described parts the finger bar with the coupling piece and rocking frame are free to rock forward or backward. By means of the hinged connections between the finger bar and coupling piece and between the coupling piece and rocking frame the finger bar is free to rise and fall at one end or the other, or both at once, so that the finger bar can follow the undulations or irregularities of the surface when in use. A hand lever and chain serve to elevate the bar in passing obstructions, and another lever rocks the finger bar axially.

The next exhibit which I take up for consideration is the Wheeler patent, No. 31686, 1861. This patent describes and shows a drooping frame mounted upon axle of two driving wheels. A hinged tongue is attached to the fore part of said frame. A second frame is also pivoted upon the said axle, and extends backward above the drooping part of the first-mentioned frame. The rear end of the upper frame is supported on a castor wheel which travels along upon the ground in the rear of the machine. To the rear right-hand corner of the
339 drooping frame is rigidly attached a vertical plate. Upon the outer or grass side of said plate is an arm or pivot, upon which is mounted a second and rocking plate, which plate is in close proximity to the first-mentioned plate and to which it is adjustably connected. Attached to the movable or rocking plate before mentioned is a hand lever for rocking the same and for adjustment thereof. To the grass side of the rocking plate are attached two ears or hinges, which connect said plate to a shoe, to which is rigidly attached the inner end of a finger bar. The drooping frame being provided upon the driving-wheel axle and the rear end being the heaviest part, it trails along near the ground. The finger bar, being hinged to said rear end of the drooping frame, is at liberty to rise or fall at the outer end, while the inner end can rise or fall by the drooping frame turning up or down on the driving-wheel axle, so that the finger bar can in any case conform in its movements to the surface of the ground when in use. By means of the rocking lever and plate, to which the finger bar is attached, the finger bar can be rocked forward or backward and can be adjustably fixed, so that the points of the guard fingers may point upward at an angle with a horizontal plane as desired, or may be left free to rock so as to pass more easily into or over transverse hollows or elevations.

Adjourned until 2 p. m.

2 P. M.

Met pursuant to adjournment.
Present: As before.

Examination of Mr. HUNT resumed:

The next exhibit to be examined is the Billings patent,
340 No. 33691, 1861. This patent describes and illustrates a rear-cut machine, in which a main frame, to which a rigid tongue is attached, is mounted upon the axle of a large driving wheel at the left-hand side of the frame and upon a crank axle of a smaller wheel at the right-hand side of the machine in the following manner: Upon the under side of the frame, a short distance in front of the large wheel, are attached two pendants, one at either side of the machine. In the lower end of these pendants a crank axle, lying parallel to the axle of the large wheel, is mounted. This axle projects beyond the right-hand pendant, and upon the end of said crank axle is a rigidly attached crank, which in its normal position lies horizontally or about parallel with the longitudinal timbers of the main frame. In the end of this crank and projecting toward the

grass side of the machine is a crank pin, which serves as an axle upon which the smaller wheel before mentioned turns. Between the crank and the pendant is rigidly attached a segment of a sheave, and to the side of this sheave is rigidly attached a vertical lever. At the forward part of this segment of a sheave is attached the end of a chain, which passes backward over and in the groove of the sheave. The rear end of this chain is attached to one end of a coiled spring, the opposite end of which is attached to the rear cross-timber of the main frame. Upon the under side of the rear part of the main frame is bolted a transverse plate, which near the right-hand corner of the frame curves downward, and in the lower end of this plate is a bearing, in which is pivoted the rear end of a shoe, to which the finger bar is rigidly connected. The front end of the
341 shoe is also pivoted in the end of a coupling bar. This bar extends from the shoe diagonally forward to where the opposite end is connected to the frame of the machine by a hook-and-eye joint. Upon the right-hand timber of the main frame is attached a pendant extending downward near the coupling bar aforesaid, and in this pendant is an adjustably vertical sliding piece. At the lower end of this sliding piece is a rearwardly projecting arm, which passes through the coupling arm aforesaid near the shoe. A lever pivoted upon the main frame, one arm of which is connected to the upper end of the vertical sliding piece and the other arm of which passes within reach of the driver, serves to elevate or depress the vertical sliding piece and the outer end of coupling arm. By this means the front end of the shoe is also elevated or depressed, thus rocking the finger bar upon its rear pivot, which is made loosly fitting enough for this purpose. By examining the manner in which the right side of the main frame is supported from the crank wheel described it will be seen that it is held in its position above the ground by the tension of the coiled spring to which the chain that passes over the sheave is attached, so that the weight of that side of the frame is balanced by the tension of said spring and by increasing or decreasing the tension of the spring the position of the main frame can be varied accordingly. The finger bar in this machine is free to rise and fall at its outer end only, the inner end being raised with the frame by means of the cranked axle, as described. I here produce a model made after the patent.

342 Counsel for defendants offers in evidence the model produced by the witness, and the same is marked "Defendants' Exhibit Billings 1861 Model."

The next exhibit that I take up for consideration is the Herrington, No. 31973, of 1861, which describes the construction of a front-cut machine, the details of which are about as follows: A frame is pivoted near the driving wheels upon the axle of the same. This frame extends forward from the axle and supports a platform, to which the tongue is rigidly connected. A second frame is suspended upon the driving-wheel axles, and extends forward beneath the first-described frame at about in line with the front of the same. The rear of this suspended frame extends backward a short distance be-

yond the driving-wheel axle, and to the lower part of this rear extension, at the right-hand corner thereof, is the rear end of a push bar loosely connected thereto in such a manner that it may rock longitudinally, and also that the front end may rise and fall. To the front end of said push bar a shoe is bolted, and to said shoe is rigidly attached the inner end of a finger bar. At a short distance in the rear of the shoe, upon the upper side of the push bar, is a swivel joint, which connects the push bar with the coupling bar, which extends transversely across and beneath the front end of the lower frame, where the opposite end of the coupling bar is connected to the front left-hand corner of the frame by a swivel joint, which is adjustable in the line of its length. The tongue frame and the front end of the suspended and vibrating frame are adjustably con-
343 nected by an adjusting standard attached at the lower end in the lower frame and extending upward or alongside through the tongue, to which it may be connected at different points as desired. A segment of a sheave is pivoted on and near the front right-hand corner of the tongue frame. This segment is provided with a hand lever for operating the same. The upper end of a lifting chain is attached at the top of the sheave and passes over the same downwards to the push bar, where it is connected to it near its outer edge. At a short distance in the rear of the connection, between the coupling bar and the push bar, is connected the lower end of a notched bar. This connection is by preference a hook-and-eye joint, which will permit the push bar to turn sidewise upon the same, and should be placed near the inner edge of the push bar for reasons hereafter explained. The upper end of this notched bar passes through a slotted plate, which permits the notched bar to move backward or forward in the same for the purpose of engaging or disengaging the bar with the notched plate. A lever pivoted at one end to the tongue frame, and the opposite end of which is held against the front edge of the notched plate by the pressure of a spring, serves to keep the notches of the plate from catching when in ordinary use. By means of the hand lever the segmental sheave and its lifting chain, the finger bar may be raised at its inner end, and by pushing forward the upper end of the notched plate the teeth engage with the edge of the slotted plate through which it passes, thereby preventing an upward movement of the push bar. Now, by pulling back upon the
344 lever the strain of the chain is brought to bear at a point outside or toward the grass side from the resisting standard—that is, the notched plate—and thus the outer end of the finger bar is raised from the ground for the purpose of passing obstructions, etc. By the use of the different notches in the plate aforesaid a varying position between the push bar and the tongue frame is permitted. The combination of the swivel-jointed coupling bar, the swivel-jointed push bar, with the vibrating frame allows the finger bar to rise and fall freely at either end and to follow the surface of the ground over which it passes in use. I here produce a model made after the patent.

Counsel for defendants offers in evidence the model produced by

witness, and the same is marked "Defendants' Exhibit Herrington Model."

The next exhibit which I take up is the Bartlett patent, No. 34545, 1862. This patent describes a stiff-tongue, rear-cut machine. A main frame, to which is rigidly attached the tongue of the machine, is suspended near its center, on the axle of two driving wheels, to a pendant at the right-hand front corner. The front end of a drag bar is adjustably connected, such adjustment being made by means of a vertical slot in said pendant, in which the end of the drag bar moves up or down. A coupling arm is attached to the rear end of the drag bar by hinged connection, the opposite end of said coupling arm being attached to the frame near the rear left-hand corner by means of a two-way joint, which permits the coupling arm to rock axially or to allow the outer end and finger bar to rise or fall. The finger bar is rigidly attached at its inner end to the drag bar. A rocking three-armed lever is mounted on the axle of the driving wheel, one arm of which is vertical; another arm projects forward over the drag bar, where it is connected to the same by a link chain; another arm projects rearward over the rear end of the drag bar. At the extremity of the rear arm aforesaid a hook is attached, and a chain which is attached to the rear end of the drag bar is connected with said hook. By moving the lever forward the rear end of the drag bar and with it the finger bar is raised from the ground. By reversing the movement of the lever the front end of the drag bar is raised and the points of the guard finger and the finger bar is rocked upward, and by dropping the lever back a little the points of the guard finger will rock downward. By the use of the above-described main frame the swivel-jointed coupling bar and drag bar, with the finger bar, is free to rock axially within limits. The front end of the drag bar, or that portion which plays in the slotted pendant, is round, in order that the outer end of the finger bar, together with the drag bar, may be turned up into a vertical position, and also that the bar may adjust itself to hollows or elevations which lie approximately parallel to the line of draught.

345

The next exhibit which I now produce is the Stout patent, No. 35479, 1862, which represents a stiff-tongue, rear-cut machine. A rectangular main frame, composed of four longitudinal bars and two transverse or cross-bars, is mounted upon the axle of two driving wheels. The rear end of said frame is supported upon a castor wheel. A second frame is pivoted near its front part upon the axle of the driving wheels, and the rear portion of this frame trails along near the ground. The rear portion of this frame is forked and pivoted. In the arms of the fork is a rocking bar, which lies parallel with the driving-wheel axle. This rocking shaft is provided with a short arm extending a short distance to the rear, to which is attached the inner end of the coupling-arm or finger-bar extension. This extension bar extends outward toward the grass side of the machine, where it is rigidly attached to a shoe, the finger bar also being rigidly attached thereto. The forward end

346

of the shoe is connected to the rear end of a drag bar by means of a loosely made pin joint. The front end of the drag bar is pivoted upon the side of the front end of the frame. A vertical arm is rigidly attached to one end of the rock shaft, which is mounted in the trailing frame, by means of which the rock shaft, and with it the coupling arm and finger bar, may be rocked forward or backward as desired. By means of the trailing frame, which vibrates upon the axle and the rock shaft at the rear end of the same, and the connecting arm or coupling bar and the hinged joints in the drag bar the finger bar is enabled to adjust itself to and follow the surface of the ground. I here produce a model after the patent.

Counsel for defendants offers in evidence the model produced by the witness, and the same is marked "Defendants' Exhibit Stout Model."

347 The next exhibit which I have to consider is the Prentiss and Birdsall patent, No. 43225, 1864. This patent describes and shows a stiff, rear-cut machine. A main frame is suspended on the axle of two driving wheels. At the rear end of this frame, under and near the left-hand corner, is pivotally connected one end of a coupling bar. This bar extends transversely underneath the machine to the rear portion of a shoe, where it is connected to the same by a pin joint. To the forward end of the shoe the rear end of a drag bar is attached by a hinged joint. This drag bar extends diagonally forward to the left-hand front corner of the frame, where it is also attached by a joint. The inner end of a finger bar is rigidly connected to the shoe. By the use of the aforesaid parts in the manner described the outer end of the finger bar can rise or fall; also the inner end of the same, or both at once, and the finger bar is thus enabled, in passing over the surface of the ground, to conform to any irregularities of the same.

Further taking of testimony here adjourned until Thursday, October 22nd, 10 a. m.

THURSDAY, *October 22nd*, 1885—10 a. m.

Met pursuant to adjournment.
Present: As before.

Examination of Mr. HUNT resumed:

The next exhibit is the D. B. Luckey patent of 1864. This patent shows and describes a front-cut, stiff-tongue machine in which a rectangular frame is mounted about midway upon the axle of two driving wheels. Underneath the frame, a short distance in front of the driving wheels, is a pendant, attached to one of the lon-
348 gitudinal bars of the frame. The lower end of this pendant is provided with a transverse slot. A short distance in front of said pendant and attached to the same bar is another similar pendant. Passing through the slots of said pendants are the inner ends of two coupling bars. A pin passes longitudinally through each of the pendants and through the ends of the coupling bars,

thus coupling the same together. The hole in the front pendant through which the pin passes is elongated vertically for a purpose hereinafter explained. These before-mentioned coupling bars extend outwards towards the grass side of the machine to a shoe, to which they are attached by hinge joints. The inner end of a finger bar is rigidly attached to said shoe. The rear end of the shoe is provided with a vertical slot, in which is loosely fitted the front end of a push bar. A horizontal pin passes loosely through the rear end of the shoe and through the push bar, thus connecting them. This push bar extends backward to the rear frame, where it is connected by a swivel joint to a pendant from the frame. A hand lever provided at the lower end with a segmental sheave is pivoted to the side of the main frame over the shoe. The upper end of a lifting chain is attached to the upper portion of the segmental sheave, and, passing downward in the groove of the same, is connected to the shoe by two branches. In operation the outer end of the finger bar is free to rise and fall, turning upon the swivel joint at the rear of the push bar and upon the hinged connections of the shoe and coupling arm. The inner end of the finger bar, with the shoe, can rise and fall freely by turning upon the pin joints
349 at the inner ends of the coupling arms and the swivel joint at the rear end of the push bar. The front end of the shoe and the fronts of guard fingers and finger bar can be raised or elevated a short distance by a backward movement of the hand lever, for the reason that in lifting on the shoe in said manner the inner end of the front coupling bar will rise in the elongated slot, thus allowing the front of the shoe to be lifted or rocked as desired, the rear portion of the same—that is, the shoe—being held down somewhat by the rear coupling bar and also by a resisting spring pressing upon the rear of the shoe. A continued motion, however, of the hand lever after the inner end of the front coupling bar has brought up against the upper end of the slot through which the pin passes will raise the shoe bodily from the ground.

The next exhibit which I take up and consider is the Pine patent, No. 44655, 1864. This patent shows and describes a gear and tongue frame combined, to which is rigidly attached the tongue. This is a type of machine in which, although the frame is pivoted upon the driving axle of the machine, the frame only moves upon the driving axle of the machine by means of the tongue itself and is held in a comparatively rigid position by the end of the tongue resting in the neck yoke. This type of machine is also illustrated in the Herrington patent and some others, the peculiar feature of which consists in the finger bar being coupled to the main frame by a coupling arm having joints or hinges at either end. The main frame of this machine is provided at its front left-hand corner with a hinge, which connects it with the inner end of a coupling
350 bar which extends transversely across beneath the frame towards the grass side of the machine to a shoe, to which it is similarly hinged. The inner end of a finger bar is rigidly attached to said shoe. A short distance from the shoe and upon the coupling bar is a swivel joint, which connects the forward end of a

push bar with the coupling bar. This push bar extends backward beneath the frame to a pendant in the rear of the driving-wheel axle, to which it is attached by a pivotal connection. The finger bar can rise or fall and conform to the surface of the ground when in use, and may also be folded up and carried on the frame. I here produce a model made after the patent.

Counsel for defendants offers in evidence the model produced by the witness, and the same is marked "Defendants' Exhibit Pine 1864 Model."

The next exhibit for consideration is the Bramer patent, No. 51546, 1865. This represents a front-cut machine in which the tongue is rigidly attached to the main frame, said frame being pivoted on the axle of the driving wheels. The finger bar of this machine is rigidly attached to a shoe. This shoe is connected to the left-hand corner of the frame by a transverse coupling arm, which is hinged at its outer end to a shoe and at the opposite end by a ball-and-socket joint. A short distance from the shoe and upon the coupling arm is a vertical arm rigidly attached to or forming a part of the coupling arm.

351 The forward end of a push bar is connected to the vertical arm of a coupling bar by an intervening plate, which is pivoted at the forward end to the end of the push bar. The rear portion of the plate is provided with a slot, through which passes a locking screw to lock the coupling arm to the push bar, in order to prevent a rocking motion when the same is not wanted. By leaving the locking screw loose a lifting chain connected to the intermediate plate and to a hand lever serves to rock the finger bar axially. The above-described construction enables the finger bar to follow and adjust itself to uneven surfaces when in use. I have not made model to this patent.

The next exhibit which I take up is the Pine patent, No. 62681, 1867. This machine is substantially the same as that described in the Pine patent of 1864. Additional improvements, however, are here shown, among which is a swivel joint connecting the end of the coupling arm with the frame, this feature being also found in the Ball 1859 patent, and in the Dolph patent, and also in the Herrington patent. This feature admits of the finger bar being rocked axially. By a system of levers connected to the coupling bar the rocking of the finger bar may be made self-acting or the rocking of the bar may be adjusted. I have not made a model to this patent.

Adjourned until 2 p. m.

2 P. M.

Met pursuant to adjournment.
Present: As before.

Int. 8. In view of the prior state of the art as illustrated by
352 the exhibits which you have just reviewed, what, in your opinion, are the improvements contemplated by the first and second claims of the Graham patent, on which suit is brought? In

your answer you may refer to any of the exhibits, either patents or models, which are in evidence.

Ans. The improvements contemplated are for devices by which the finger bar is connected to the main frame of the machine in such a manner as to allow said finger bar to rise and fall at either or both ends and to conform to the surface of the ground over which the machine may pass, and also that the finger bar may be rocked axially. The specific devices which are claimed in the first claim of the Graham patent are a coupling arm having a swivel joint connecting it with the frame; also a drag bar provided with a swivel joint connecting one end of the said drag bar to the shoe to which the finger bar is attached, and the opposite end of said drag bar is connected to the front part of the frame of the machine. The shoe is connected by a hinge or hinges to the outer end of the coupling bar. By referring to the Jonathan Haines patent a drag bar is shown connected to the finger bar by a joint which admits a free movement of the finger bar to rise and fall, while a transverse rod is also so connected to the finger bar and main frame as to not interfere with either end of the bar rising or falling. These movements are independent of the main frame. In the Ball model of 1859 the inner end of the coupling bar is attached by a universal joint to the frame and the outer end is hinged to a rocking piece upon a shoe, and to this rocking piece the finger bar is rigidly attached, so
353 that the points of the guard fingers and finger bar itself are capable of a free rocking movement. An arm is attached in such a manner that it may be used as a controlling arm for rocking the finger bar. The drag bar of this machine is also connected to the frame at the front end by a universal joint, so that, in addition to the rocking movement of the finger bar, a vertical vibratory movement of either end of the finger bar is provided for. By means of the devices described the finger bar can, independently of the frame, rock axially and conform to the surface of the ground, however uneven.

I find in the Ball patent, 1856, a swivel joint at the front end of the drag bar, which connects the bar with the frame. In the Tinker & Sprague patent of 1857 and in the model for the same a device is shown which connects the finger bar with the main frame, which is virtually a coupling bar, but the ends of which are provided with hook-and-eye joints instead of universal joints. This construction, while not permitting a complete rotation of the finger bar and coupling bar axially, permits abundant movement for the finger bar to rock forward and backward.

In the Dolph patent, 1857, the coupling bar is attached to the shoe and to the frame by sufficiently loose joints to admit of any required rocking movement of the finger bar, while the front end of the drag bar, having a universal joint and also a lifting device at the same end, enables the finger bar to rise and fall at either end entirely independent of the main frame. A distinct rocking movement of the finger bar is also shown.

354 In the Stetson and Maynard patent, 1859, a coupling arm

provided with a rocking lever is shown, by means of which the the finger bar may be rocked at will.

In the Chenoweth patent, 1859, the coupling arm is attached to the main frame by a universal joint, which not only permits the finger bar to rock axially upon this joint, but it can make a complete revolution about this axis and may be turned forward or backward. The finger bar can rise or fall at either end, impeded somewhat, however, by the weight of the frame, but if the frame is nicely balanced this resistance of the frame will be so slight as to be not worth considering.

In the Lamont and Grojean patent a construction is described in which the finger bar is allowed a rocking movement controlled by a lever. A free rising and falling movement of the ends of the finger bar is also allowed by means of a coupling arm hinged respectively to the shoe and to the rocking piece. This rocking piece and coupling arm form virtually a universal joint, which connects the coupling arm to the frame of the machine.

In the Wheeler patent of 1861 the finger bar is connected to the machine in such a manner as to allow the finger bar to be rocked at the will of the driver.

In the Herrington patent of 1861 and in the model of the same the coupling bar connecting the shoe with the frame of the machine is provided with a swivel joint where it is connected with the frame. The rear end of the push bar is also provided with a joint connecting it with the frame, which admits of more than one-half of the complete revolution of the push bar axially, so that while
355 not being strictly a swivel joint it is yet capable of more than the required motion in use. In this machine the finger bar can freely conform to uneven surfaces, as it can rise and fall freely at either end.

In the Billings patent of 1861 a rocking movement of the finger bar is provided for, which is under control of the driver.

In the Bartlett patent of 1862 the coupling arm is provided at the inner end with a swivel joint, which admits not only of a rising and falling movement of the rear end of the drag bar and finger bar attached, but admits of a rocking movement of the finger bar by means of a lever under the will of the operator. The front end of the drag bar, while not having, strictly speaking, a universal joint, is provided with a device by which the drag bar can rotate or rock axially, and yet the rear end may be raised without cramping, so that the motions required of a swivel joint in this position are freely obtained, with the addition of a vertical movement of the front end of the drag bar.

In the Stout patent, 1862, I find a device which rocks the finger bar positively forward or backward and a locking device by which it can be fixed in any desired position. This consists essentially of a rock shaft with an arm or lever attached. A hinged joint at the front end of the shoe, connecting it with a drag bar, admits, in this case, of the finger bar and shoe rocking comparatively free of resistance from the drag bar.

In the Luckey patent, 1864, I find a push bar, having at the rear

end a swivel joint and connected at the front end to a shoe by pin joint. In this case the joints upon the ends of the push bar
356 are simply reversed from those in the Graham patent. A rocking motion of the finger bar is also provided for.

In the Pine patent, 1864, a push bar is shown connected to the coupling bar by universal joint.

In the Bramer patent of 1865 the coupling bar is connected to the frame by ball-and-socket joint. The push bar is simply loosely pin-jointed to a vertical arm of the coupling bar, and the rear end is similarly connected with the frame, which construction, while not having a swivel joint in the push bar, admits all of the required movements of the finger bar to be made.

In the Pine patent of 1867 a universal joint connecting the coupling arm to the main frame is shown. A push bar is also shown, which, while not having a strictly swivel joint, admits a rocking movement of the finger bar and also a free rising and falling movement of the same.

In view of the state of the art as shown the first claim is limited to the specific form of the machine as described, which is essentially in its features a drag-bar machine.

Further taking of testimony here adjourned until Friday, October 23rd, 1885, 10 a. m.

FRIDAY, *October* 23, 1885—10 a. m.

Met pursuant to adjournment.

Present: As before.

Examination of Mr. HUNT resumed:

Therefore this claim is limited to the new grouping of the old and well-known elements in a drag-bar machine only. To sustain
357 my opinion I will here state that the coupling arm, provided with a universal joint connecting the arm with the machine, was an old device, as shown in Ball of 1859, Herrington, and Dolph; that a push bar, having a swivel joint connecting it with the finger bar, was old, as shown in Pine's patent of 1864. In all of these machines mentioned and in others also the same results had been accomplished, and the only possible new grouping of these old parts to obtain the results sought could only be applied to a drag-bar machine, and the only way in which this new grouping could be accomplished was by placing the swivel joints, which was in itself old, between the rear end of the drag bar and the finger bar.

The elements of the second claim are substantially the same as those of the first, with the addition of the lever device for rocking the finger beam; but this device was in itself old, as exemplified in Wheeler, Stetson & Maynard, Tinker & Sprague, and others. I cannot see how it would require any invention to take the lever off of any of these old machines and place it onto the analogous devices in the Graham machine. A hinged joint between the rear end of a drag bar and the shoe was not new, as shown by the Stout patent, and what Graham did was simply to make this joint a

swivel joint, and upon this swivel joint, as applied in a drag-bar machine, rested the new grouping embodied in the first claim.

Int. 9. You are familiar with the defendants' machine from your experience in building it, and you have also examined one of these machines offered in evidence by the complainants, marked "Complainants' Exhibit Defendants' Machine." In your opinion
358 does this machine contain the improvements of the first and second claims of the Graham patent as you understand them? Give your reasons for any opinions you may express.

Ans. As I understand it, the defendants' machine does not contain the improvements which are claimed in Graham's first claim, nor of the second claim of the same. My reasons for this view are, first, in the defendants' machine the old devices are embodied in a front-cut machine, which is not contemplated in Graham's patent; second, in the defendants' machine one of the elements of Graham's first claim is entirely wanting—that is, the swivel joint in the push bar. Therefore the combination claimed by Graham is incomplete; hence Graham's improvements are not embodied in defendants' machine referred to. As I understand the novelty of the second claim to depend upon the first, and the improvements of the second claim to depend upon the first, and the improvement of the second claim must necessarily include the limited improvements of the first, I do not think the defendants' machine contains the improvements of Graham's second claim. I will add that there is an essential difference between the operation of the devices in defendants' machine and those in the Graham patent. In the Graham machine it is intended that the finger bar shall be rocked positively forward and backward, and the devices are constructed and combined to produce this result. In the defendants' machine the finger bar can only be rocked positively in one direction, and the devices by which this motion is produced are only adapted for that purpose. In this respect the operation of defendants' machine
359 is not like that of the Graham machine, but is similar to that shown in Ball, Zug, Luckey, Bramer, and Bartlett. I consider that the defendants' machine is substantially the Pine machine, with the Ball swivel-joint coupling arm put in place of the single-hinge arm of the patent and the swivel joint at the push bar changed to a common hinge. I cannot see how there would be any invention in taking the swivel-joint coupling bar of the Ball machine and placing it on the Pine machine in a corresponding position. The lever arrangement in the Pine machine would, then, I think, rock the coupling arm and finger beam in one direction, as in defendants' machine, but, if not, I think Pine or anybody else would have a right to put a lever on the coupling arm, for such a lever was old, as seen in Wheeler, Stetson and Maynard, Billings, and others. I am confirmed in my opinion that there is no invention in substituting the Ball swivel coupling arm for the single-hinge coupling arm in Pine 1864 by the fact that when Pine himself did this in his 1867 patent he got no claim for it, and probably could get none. The inference is that Pine regarded it as an old device, or if he made any claim for it it was rejected.

Adjourned until 2 p. m.

TWO P. M.

Met pursuant to adjournment.
Present: As before.

Cross-examination by E. BANNING, Esq.:

X Q. 10. In which patent or patents of all those offered by the defendants do you find provision for the rising and falling of
360 the finger bar at either end and for the rocking of the finger bar independent of the main frame and without the use of a supplemental frame?

Ans. As I understand the question, that part relating to the rocking movement of the finger bar is that the points of the guard fingers may rise and fall, not limited to the position of the axis on which this motion vibrates, so that it is within the limit of the shoe or finger bar horizontally. This tipping of the guard finger is for the purpose of altering the position of said fingers, so they may point upwardly or downwardly as required. The joint between the shoe and the coupling arm and the coupling arm and frame allows the finger bar to rise and fall at either end, so that it can adjust itself to hollows or elevations in the line of draught. These are what I understand to be the motions called for by the Graham patent, particularly in the first claim.

The Ball patent of 1859, No. 25797, and the Dolph patent of 1857, No. 18141; the Tinker & Sprague patent of 1857, No. 17945; the Lamont & Grojean patent of 1860, No. 27641; the Herrington patent of 1861, No. 31973; the Bartlett patent of 1862, No. 34545; the D. B. Luckey patent of 1864, No. 44339; the Bramer patent of 1865, No. 51546, provide for these movements.

X Q. 11. As I understand you, you consider each of these eight patents has all the movements of the finger bar specified in the Graham patent, particularly in the first claim, and that in each such movements are obtained independently of the main frame and without the intervention of a supplemental frame?

361 Ans. As I understand the question the movements called for in the Graham patent are specified in the last three lines of the first claim. With this view I answer that each of the eight patents mentioned embody and are capable of performing such motions, limited perhaps, however, in a degree in some of such motions.

X Q. 12. In which of them or of all the defendants' patents do you find all the motions of the Graham patent, say, as specified in its first claim, obtained independently of the main frame and without the intervention of a supplemental frame? I mean particularly as to the free rocking or tipping of the finger bar.

Ans. The Ball machine of 1859 is capable of all the movements when adjusted so that the point of the rocking plate is free to move, and this feature is one of the limiting qualities in the patent; and while I concede the point that when the rocking plate is fast or locked the rocking motion ceases, yet, as I said before, the finger bar is capable, at the will of the operator, of performing the movements mentioned. The finger bar in the Tinker and Sprague patent

of 1857, No. 17945, is capable of all the movements, in a degree, depending somewhat upon the looseness of the jointed connections in the manufacture of the same. If the joints are quite loose, as is usual with agricultural machine makers, then the motions described in Graham's first claim can be produced. The tipping forward of the finger bar is limited, as in all other machines, by a stop.

In the D. B. Luckey patent, No. 44259, of 1864, the finger bar is capable of all of the motions, limited to a question of degree
362 only—that is to say, the finger bar can rock forward or backward or the end thereof may rise or fall freely when not carried on the lifting chain.

In the Bramer patent, No. 51546, 1865, the finger bar is capable of all the movements mentioned in the last part of the first claim, limited, as before, to a stop and the axially rocking motion.

In the Lamont and Grojean patent, No. 27641, 1860, in my opinion, the finger bar is also capable of all the movements mentioned.

X Q. 13. In your answer to question 9, direct examination, you say: "In the Graham machine it is intended the finger bar shall be rocked positively," etc. What do you mean by this—that Graham's rocking motion is a controllable one, only?

Ans. As I understand it by the patent of Graham itself, in a paragraph on the first page, the rocking motion of Graham is a controllable one only. What I mean by this is that the finger bar is rocked by the driver through the intervention of a lever or similar means.

X Q. 14. Then you do not consider that the Graham patent also provides for an automatic rocking motion of the finger bar?

Ans. Yes; I do consider that there is an automatic rocking motion of the finger bar, but this motion must be a slight one, and I know of no machine that has ever been built that is incapable of this motion, in a slight degree, for the reason that all the joints will allow such a motion in a slight degree. Just how much rocking motion was provided for in Graham's machine I cannot say.
363 My answer is based, in this respect, upon my practical knowledge of machines in general and their operation in the field.

X Q. 15. Which of all the defendants' patents do you consider as the nearest approach to the Graham invention, secured by the two claims in suit, both as regards the mechanical combinations claimed therein and the motions permitted or produced by them?

Ans. Basing my answer somewhat upon the results sought to be produced by the Graham patent, I will mention, as one which resembles the Graham patent, the Ball patent of 1859. If this patent or machine was provided with a swivel joint connecting the shoe with the drag bar we should have Graham's identical machine. This swivel joint allows the finger bar to rock axially, and I consider that the introduction of that swivel joint in Graham's machine was new; hence I consider that the Ball machine is the nearest in general construction and principles involved to the Graham machine.

X Q. 15½. In your answer to question 9, direct examination, you say that a front-cut machine "is not contemplated in Graham's pat-

ent." Assuming now, for the sake of a question, that you are wrong in this or that an attempt should be made to apply the Graham inventions mentioned in the first and second claims in suit to a front-cut machine, so that instead of a draught rod a push or thrust bar would be most properly used, would you consider that the swivel-joint connection of the push rod to the shoe or vibratable link should be formed in exactly the same way as in a rear-cut machine?

Ans. On the assumptions of the question, the analogous
364 position of the swivel joint in relation to the push bar and the shoe would naturally be at the rear of the shoe instead of at the front, and if the precise construction of the swivel was required in a rear cut it would naturally follow that a corresponding construction of the swivel would be called for.

X Q. 16. You have not, thus far in your cross-examination, referred to the Zug patent of 1859. Why is this?

Ans. One reason why I have not referred to the Zug patent is that the Zug patent has been pretty well ventilated before the courts; and while I consider that it has features similar to the Graham patent, yet as it lacks in the swivel joint at the rear of the drag bar connecting it to the shoe, which was the great and novel element in Graham's patent, I therefore did not mention it. I do consider, however, that the motions obtained, while they may not be exactly those of the Graham finger bar, yet, as I understand it, they are in a degree similar.

The further taking of testimony is here adjourned until Saturday, October 24th, 10 a. m.

SATURDAY, *October 25th*, 1885—10 a. m.

Met pursuant to adjournment.

Present: As before.

Redirect examination by Mr. J. M. THACHER:

R. D. Q. 17. In the defendants' machine is there a stop to limit the downward turning of the guard fingers?

Ans. There is. This stop is a variable one. It is what we call, technically, the tilting device in the machine, which consists
365 of a hand lever in the rear of the machine, connected at its lower end with a rod running forward under the frame to a point over the coupling arm. The forward end of this rod is connected to the upper end of a short lever which is pivoted upon the push bar of the machine. The lower end of this lever rests in an inclined position against a heel or projection of the coupling arm. The forward end of the push bar, being pivoted to ears above the coupling arm attached to and projecting above the same, forms a resisting point for the fulcrum of the lever through the intervention of the push bar. The upper end of a hand lever, at the rear of the machine, is held in different positions by a notched plate. The weight of the guard fingers and finger bar, being greater forward of the swivel joint or ball-and-socket joint, upon which the finger bar rocks axially, holds the projection at the rear of the coupling arm

against the lower end of the lever that is pivoted on the push bar, and thus forms a stop which limits the movement of the points of the guard fingers or finger bar from tipping downward beyond the limit fixed by said stop, but does not prevent in the slightest degree the points of the guard fingers from rising, as there is no direct connection or attachment of the lower end of the lever to the coupling bar. Now, the position of the lower end of the lever that is pivoted on the push bar is a variable one and can be placed in as many different positions as there are notches in the plate to which the hand lever is locked. By this means the downward rocking motion is adjustably limited.

366 R. D. Q. 18. As I understand your last answer, in defendants' machine, while the downward movement of the guard fingers is limited by a stop, the upward movement of the same fingers to pass over obstructions or for any other purpose is free—that is, it does not require the movement of a lever or any other device by the attendant, unless it is desired to give it a larger range of movement. Is this the operation of the machine in use?

Ans. I think it is, as I understand it. In practice, however, we find that we have more upward movement at times than is needed.

R. D. Q. 19. From your experience in connection with mowing machines is it or is it not a fact that devices for coupling the finger beam to the carriage portion of the machine are used interchangeably, but with stift frames and with drooping or vibrating frames, with only such slight mechanical changes as are required to adapt the devices to each situation?

Ans. I shall have to answer that question in a general way. In the manufacture of mowing machines or any other machines the end sought to be obtained is a question the means of which is largely left to the discretion of the mechanics employed. If they see in any other similar machine devices by which their own machines may be improved they are apt to adopt them, unless they are of a nature which are, in themselves, covered by patents. If they are so old as to be public property manufacturers have no hesitation in appropriating them. It sometimes, however, is a question whether the translation of such devices from one machine to another does not produce a machine different in its operations from the original machine. If, however, the device is of a simple character, as the difference between one hinge from another hinge of a different style and one swivel joint from another swivel joint, different in make, the mere adoption of one for the other would involve no change in principle, nor would there be any invention in the substitution or interchange of one part for another. To illustrate my position I will take the Ball machine of 1859. In this machine there is a swivel joint in the coupling bar connecting the same with the frame. In the Pine machine (1864 model) the coupling bar is connected to the machine by a hinged joint. As I understand it, there would be no invention in placing the swivel joint of Ball into the Pine machine, as it was an old and well-known, simple device; and it has been customary among manufacturers, and still is, to use freely any and all distinct mechanical

367

constructions, such as connection of joints of all kinds, levers, etc. I do not consider it within the scope of invention to take the lever for rocking the finger bar, as found in Lufkin or in Wheeler, 1854, which is applied directly to the rocking piece of a finger bar, or of taking the lever of Stetson & Maynard from the coupling arm and putting it onto the coupling arm of the Graham machine, and the right to do so is, in either case, as good as Graham's right to adopt the old swivel joints from old machines.

Recross-examination by Mr. BANNING:

R. C. 20. Stripped of verbiage and stated in a few words, your position as to Graham's first claim is about this: That the Ball patent of 1859, No. 25797, has a vibratable link connected to
368 the gearing carriage by a swivel joint; that the Pine patent of 1864, No. 44655, has a push rod connected to a vibratable link by a swivel joint, and that the only thing Graham did was to take one of these swivel joints out of the machine shown in one of these patents and put it into the machine shown in the other. Is this correct?

Ans. The description is correct, but does not state, as I understand it, my position correctly. According to my understanding, the thing that Graham did was to take the Ball machine, a rear-cut, and take, not a swivel joint from any other machine, but simply a swivel joint, and put it between the drag bar and the shoe or finger bar.

R. C. 21. Then, as I understand you, the question whether inventive or mere mechanical skill was required in doing this is not in any way affected by the Pine patent, since you now say that it was not a joint from the Pine machine or any other particular machine, "but simply a swivel joint" that, as you say, Graham put into the Ball machine?

Ans. Understanding that this question means whether there was mechanical skill only or invention required in placing the swivel joint into the drag bar by Graham, I will answer that in my opinion invention, in a degree, was required.

R. C. 22. My last question was directed to the purpose or object you had in view in frequently referring to the Pine patent in connection with the Ball, particularly in view of your preceding answer, in which you stated that Graham took, "not a swivel joint from any other machine, but simply a swivel joint, and put it between
369 the drag bar and shoe or finger bar." If, as you now say, Graham did not take any joint or feature from the Pine patent for this purpose, will you be kind enough to state your object in so often referring to the Pine patent in the way above mentioned?

Ans. In regard to that portion of my previous answer in which I said that Graham took a swivel joint not from the Pine or any other machine only, the question was so framed as to imply that the Pine machine was the particular machine from which the swivel joint was taken, and it was to dispel this idea that I answered the question as I did. That Graham had as good a right to take it from

the Pine machine as any other is evident. My reasons for referring particularly to the Pine machine were that this machine is a type to which the Plano Manufacturing Company's machine belongs.

R. C. 23. I have not in any of my questions intended to imply that the Pine machine was the particular machine from which Graham's swivel joint was taken, for I know that such was not the fact; but I have simply desired to get a clear statement of your views as to the bearing of the Pine patent upon the questions involved in this case, my own judgement being very clear that it has no bearing whatever thereon. But I will now ask you whether you consider the Pine machine, as represented by the "Defendants' Exhibit Pine 1864 Model," as at all a practical machine, or whether you have ever known of its manufacture in the form shown in the Pine patent of 1864 or in this model?

Ans. With the enlightened views we now have in regard
370 to mowing machines, the Pine machine is undoubtedly not up to the standard of the more modern machines. With the views in regard to mowing machines at the time the said machine was invented, it was undoubtedly a practical machine. I have never had the opportunity of witnessing its operation in the field, and my opinion is founded on its general construction. I have understood that the Pine machine was made in Troy, but whether from this patent only I am unable to state.

GEORGE G. HUNT.

The further taking of testimony is here adjourned until Monday, October 26th, 1885, 10 a. m.

Pursuant to adjournment, met at 10 o'clock a. m. this 26th day of October, A. D. 1885.

Present: As before.

WM. H. JONES, the next witness, being produced and sworn, testifies as follows in answer to interrogatories propounded by defendants' counsel:

Q. 1. What is your name, age, residence, and occupation?

Ans. Wm. H. Jones; age, 40 years; residence, Evanston, Cook county, Illinois; occupation, manufacturer.

Q. 2. State whether or not you are an officer in the defendant corporation, The Plano Manufacturing Co. And, if so, what office do you hold?

Ans. I am the president of the defendant corporation.

371 Q. 3. State whether or not you have had the care and management of this suit in behalf of this defendant corporation.

Ans. Yes; I have. I employed the defendants' solicitors in this case, and have been the only one in communication with the attorneys on behalf of the defendants.

Q. 4. State whether or not, in the course of your business in obtaining evidence in defense of your cause, you have procured or caused to be procured any old machines constructed prior to the

application of Graham for the letters patent sued on and prior to any invention of Graham of the inventions claimed in said letters patent; and, if so, of whom did you procure such machines.

Ans. I learned from certain parties that Bradley & Company, of Syracuse, N. Y., had built a lot of mowers and put them on the market in 1863, and then I wrote to them (in January or February last), and they answered back that they had built those machines, and such negotiations were had that I finally procured a machine which they said was built in 1863, and also a model of the same.

Q. 5. Did you receive letters from Bradley and Company or any member of the firm in due course of mail in answer to your letters to them?

Ans. Yes.

Q. 6. Did you finally purchase by mail one of said old machines of Bradley and Company, of Syracuse, New York?

Ans. Yes.

372 Q. 7. State what evidences you have that said machine, so purchased by you, was sent by Bradley & Co.

Ans. We have the machine so sent by Bradley & Co. in our office, corner Lake and Canal streets, Chicago, Ill. I have a letter, received in due course of mail, from Bradley and Company, of Syracuse, which I now produce. I have also an expense bill of freights on said old mower sent from Syracuse, which I herewith produce.

Defendants' counsel here offers in evidence the letter so received by the witness, and the same is marked "Defendants' Exhibit Bradley & Co. Letter, Feb. 20th, 1885," and also the expense bill identified by the witness, and the same is marked "Defendants' Exhibit Expense Bill for Bradley Machine."

Q. 8. Look at the "Defendants' Exhibit Bradley & Co. Letter, Feb. 20, 1885," and state whether the same was received in due course of mail and in answer to a prior letter written by your company.

Ans. Yes.

Q. 9. When was this machine from Bradley & Co. received by your company, or about when?

Ans. It was received about the first of March, 1885, at our factory at Plano, Illinois, and was shipped the latter part of last week to our offices in Chicago, where it now is.

Counsel for complainants objects to the foregoing questions and answers, and each of them, as being immaterial, irrelevant, and
373 incompetent, and not the best evidence of anything in reference to the Bradley machine therein mentioned, and without waiving any of these objections proceeds to cross-examine the witness as follows:

Cross-examination:

X Q. 1. The machine your company has been manufacturing and which is now in controversy in this suit is called the "New Warrior" mower, is it not?

Ans. Yes.

X Q. 2. It is the same machine that the Warrior Mower Co. of Little Falls, New York, and William Deering, of this city, have been manufacturing for a number of years under the same name, is it not?

Ans. No, sir; as to Deering. I don't know as to the "Warrior" Company, of Little Falls, New York.

X Q. 3. Is it not substantially the same machine that Deering has been manufacturing either as the "Warrior" or the "G. & D." or the "Deering" mower?

Ans. No.

X Q. 4. By whose orders or direction has the Plano Manufacturing Company manufactured the "Warrior" mower in controversy in this suit?

Ans. We never built a "Warrior" mower; we did build the "New Warrior."

X Q. 5. Please answer the question as to the "New Warrior" which your company has been building.

Objected to by defendants' counsel as irrelevant, incompetent, and immaterial, and the same objection is made as to all prior questions by complainants' counsel.

374 Ans. Our company built the "New Warrior" under my directions, beginning in time for the harvest season of 1882, I think.

WM. H. JONES.

Further taking of testimony hereby adjourned until 2 o'clock p. m., same day and place.

MONDAY, *October 26th*, 1885—2 p. m.

Met pursuant to adjournment and adjourned forthwith to the office of the Plano M'f'g Co., corner of Lake and Canal streets, Chicago, Illinois, to proceed with the taking of testimony.

Present: As before.

FRANK E. CURTIS, the next witness, being first duly sworn, testifies as follows in answer to interrogatories propounded to him by defendants' counsel:

Q. 1. Please state your name, age, residence, and occupation.

Ans. Frank E. Curtis; age, 37; residence, Plano, Kendall county, Illinois; occupation, yardmaster at the shops of the Plano Manufacturing Company, the defendant corporation.

Q. 2. What are your duties as such yardmaster with reference to the goods shipped and received by said defendant corporation?

375 Ans. Well, all their goods received I take from the depot and deliver at the shop or the warehouses where they belong; and, also, I invoice everything when I deliver it.

Q. 3. Have you received for the defendant corporation an old mower shipped from Syracuse, N. Y.? If so, state when you received it, who shipped it, and where such mower now is.

on behalf of defendants to be used upon the hearing of the above-entitled cause, at our offices, 52–59 Ashland block, Chicago, Illinois, before Leonard Watson, a notary public, or other competent officer.

The taking of testimony will continue from day to day until completed.

You are invited to be present and cross-examine.

COBURN & THACHER,
Solicitors for Defendants.

380 *Notary's Certificate.*

CHICAGO, ILL., *November* 19, 1885.

Service of the above notice by copy acknowledged this 18th day of November, A. D. 1885.

——— ———,
Solicitors for Complainants.

STATE OF ILLINOIS, } ss:
County of Cook, }

Leonard Watson, of lawful age, being first duly sworn, deposes and says that he served the above notice by leaving a copy thereof with Thomas Banning, one of the firm of Banning & Banning, at 11 o'clock a. m., the 18th day of November, A. D. 1885.

LEONARD WATSON.

Subscribed and sworn to before me this 18th day of November, A. D. 1885.

[SEAL.] ORSON H. BROOKE,
Notary Public.

381 United States Circuit Court, Northern District of Illinois. In Equity.

ALVARO B. GRAHAM *et al.*
vs.
THE PLANO MANUFACTURING COMPANY *et al.*

Pursuant to notice, hereto attached, met at the office of Coburn and Thacher, Ashland block, Chicago, Illinois, this 19th day of November, A. D. 1885, at 10 o'clock a. m., to take testimony on behalf of the defendants in the above-entitled cause, before Leonard Watson, a notary public in and for the county of Cook and the State of Illinois.

Present: John M. Thacher, Esq., of Coburn & Thacher, on behalf of the defendants, and Thomas A. Banning, Esq., of Banning & Banning, on behalf of complainants.

Whereupon the following proceedings were had:

C. C. BRADLEY, a witness produced on behalf of the defendants, being first duly sworn to tell the truth, the whole truth, and nothing but the truth, testified as follows in answer to interroga-

382 tories propounded to him by JOHN [illegible] THACHER, Esq., counsel for defendants:

Q. 1. What is your name, age, residence, and occupation?

Ans. C. C. Bradley, Syracuse, New York; age, 51; manufacturer of reapers, mowers, hay-rakes, Bradley cushion [illegible]ip-hammers, road carts and wagons.

Q. How long have you been engaged in this business, and under what business name?

Ans. I have been engaged in business since I was sixteen years old as a manufacturer; commenced manufacturing reapers and mowers in 1859. At that time the concern was C. C. Bradley & Son. Later on it was organized into a stock company entitled as Bradley Manufacturing Co. About nine years ago it was reorganized as "Bradley & Co."

Q. 3. Where was this business carried on?

Ans. It has always been carried on in Syracuse, N. Y.

Q. 4. Did you send to the Plano Manufacturing Co. an old mowing machine some time about last March?

Ans. Yes, sir.

Q. 5. Please state if you ever made, at Syracuse, machines like that old machine so sent to the Plano Co.

Ans. Yes, sir.

Q. 6. What year did you make the first of those machines?

Ans. 1863.

Q. 7. Please state the reasons for your building that style of machine, and something of what you did in that year—1863.

383 Ans. In 1859, '60, '61, '62, and '63 we made what was called a "rear-bar Hubbard mowing machine." In 1862 and '3 we made what was called a "light rear-bar Hubbard machine." The majority of the farming community were accustomed to using forward or front cut mowers, and we were forced to make one to compete with other manufacturers. In the winter of 1862-'63 we designed and made a forward-bar machine, like the old machine, which was shipped to the Plano Manufacturing Co. We thought in making this forward-cut machine that it was necessary to have a bar that would oscillate on boggy ground similar to the old Ball machine, with which I was familiar. In the harvest of 1863 we tested this forward-cut mower, and also sold some of them to other parties.

Q. 8. I call your attention to this model, which I now put before you, and ask whether you recognize and can identify it, and, if so, what it represents?

Ans. I can identify it, and it represents a forward-cut mower as we made them in 1863 and '64—the mower that I referred to in my answer to the last question. This model came from our firm at Syracuse, and was made there, and is a model of those old machines.

Counsel for defendants here offers in evidence the model just identified by the witness, and the same is marked "Defendants' Exhibit Model of Bradley 1863 Front-Cut Mower."

Q. 9. Have you any means of showing by any of your books the sale or shipping out of any of these machines in 1863?

Ans. Yes, sir; I have here with me a receipt book showing shipment of machines. We might term it a "C. C. Bradley & Son Receipt Book."

384 Q. 10. State if you find in this book any entries showing shipment of these front-cut machines; if so, what entries, and point them out.

Ans. This receipt book shows a shipment of machine on September 7th, 1863: "Received of C. C. Bradley & Son, in apparent good order, one small mowing machine in three packages, marked 'L. L. Belden, Cleveland, Ohio, via New York Central and Lake Shore R. R.'" I know that this is one of our front-cut mowers, as memoranda are made upon this receipt book by Mr. Bonney, our former accountant, and whose handwriting I recognize: "$20 extra for extra finish on this mower;" also on same receipt, "M. G. Hubbard, forward-bar Mower." I know this refers particularly to the forward-cut mowing machine that we were making in 1863. November 20th, 1863, from same receipt book: "Received of C. C. Bradley & Son, in apparent good order, one mower, frame, one box directed to Hulshizer, Kinney & Co., Philipsburg, N. J., via New York." The memoranda made on this by our Mr. Bonney, former accountant, is "forward bar." Also on December 16th, 1863: "Received of C. C. Bradley & Son, in apparent good order, one forward-bar mowing machine, complete, in two packages, Hulshizer, Kinney & Co., Philipsburg, N. J., via New York."

Counsel for complainants states that the receipts which have been read in evidence are contained in a book of receipts running from May 26th, 1863, to May 16th, 1864, and that the book in

385 which they are contained need not be offered in evidence as an exhibit, but that it may remain in the possession of the witness or the defendants' counsel, to be produced at the hearing, should either party desire it.

Counsel for defendants requests the notary to identify the book by marking it "C. C. Bradley & Son Receipt Book," with his name, date, and seal, and to identify the receipts pointed out by the witness by attaching his seal to each, and further states that this book will be produced at the hearing of this cause.

Q. 11. Did you make any other front-cut mowing machines in 1863 except this Hubbard mower, like the model?

Ans. No, sir; no other front-cut except the Hubbard.

Q. 12. How long did you continue the manufacture of this Hubbard front-cut mower, like the model in evidence, and about how many did you make and sell during that time?

Ans. We made one thousand for the harvest of 1864. Beyond '64 we did not continue to manufacture them for the reason that we thought Mr. Hubbard asked an excess of royalty.

Q. 13. You stated that you first made and tried a machine or machines like this in the summer of 1863—where?

Ans. At Syracuse or near Syracuse; the farming country about there.

386 Q. 14. In these machines, as illustrated by the model, the finger bar or shoe is connected to the push bar by a slotted plate and bolt. Please state how these machines were used with reference to this joint—whether tight or loose.

Ans. They were made to be used in both ways, tight and loose. In boggy ground they were left loose.

Q. 15. Did these machines work satisfactorily?

Ans. Entirely so. There was less breakage and repair than in the same number of machines that we ever had, except machines we have been manufacturing for the past two years.

Q. 16. Can you give the names of any of your principal workmen in 1863 and '64?

Ans. Mr. R. Hamblin, of Syracuse, N. Y., was a man who worked on these machines somewhat. He also made the wood-work for these models; I think there were five or six of them.

Q. 17. Is this model that has been offered in evidence one of the old models that you sold machines by?

Ans. Yes, sir.

At the request of complainants' counsel it is agreed that the cross-examination of the witness, Mr. Bradley, may be postponed to some future day, when further testimony will be taken at Syracuse, N. Y., and that Mr. Bradley will appear for cross-examination at that time; and the witness is permitted to sign his deposition so far as taken.

C. C. BRADLEY.

387 Further taking of testimony adjourned to be taken at Syracuse, N. Y., subject to notice.

STATE OF ILLINOIS, } ss:
County of Cook, }

I, Leonard Watson, a notary public in and for the county of Cook, in the State aforesaid, do hereby certify that the foregoing deposition of C. C. Bradley was taken by and before me at the time and place therein specified; that the parties to the said cause were present at the taking of the same—complainants, by their counsel, Thomas A. Banning, Esq., of Banning & Banning, and defendants, by their counsel, John M. Thacher, Esq., of Coburn & Thacher, as therein appears; that before deposing the said C. C. Bradley was by me first duly sworn to testify the truth, the whole truth, and nothing but the truth in the cause aforesaid; that his deposition was reduced to writing before me, from his statements, and the same duly subscribed and sworn to before me, as therein appears.

And I do further certify that I am neither attorney nor of counsel for any of the parties in said depositions or caption named, and am in nowise interested in the result of said cause.

In testimony whereof I have hereunto set my hand and affixed my seal this 19th day of November, A. D. 1885.

[SEAL.] LEONARD WATSON,
Notary Public.

388 *Notice.*

United States Circuit Court, Northern District of Illinois. In Equity.

ALVARO B. GRAHAM and HUGH GRAHAM

vs.

THE PLANO MANUFACTURING COMPANY *et al.*

To Messrs. Banning & Banning, solicitors for complainants:

Please take notice that on Tuesday, the 23rd day of February, A. D. 1886, at 10 o'clock a. m., we shall proceed to take testimony on behalf of defendants, to be used upon the hearing of the above-entitled cause, at the office of P. M. Dyer, in Syracuse, Onondaga county, New York, before said P. M. Dyer, a notary public, or other competent officer.

The taking of testimony will continue from day to day until completed.

You are invited to be present and cross-examine. After
389 the conclusion of the taking of testimony under this notice, defendants expect to take testimony at Troy, N. Y.

Chicago, Illinois, February 10, 1886.

COBURN & THACHER,
Solicitors for Defendants.

Service of above notice, by copy, acknowledged this 12th day of February, A. D. 1886.

BANNING & BANNING,
Solicitors for Complainants.

390 United States Circuit Court, Northern District of Illinois. In Equity.

ALVARO B. GRAHAM *et al.*

vs.

THE PLANO MANUFACTURING COMPANY *et al.*

Pursuant to notice hereto attached, met at the office of P. M. Dyer, Syracuse, Onondaga county, New York, this 23d day of February, A. D. 1886, at 10 o'clock a. m., to take testimony in behalf of the defendants in the above-entitled cause, before P. M. Dyer, a notary public in and for the county of Onondaga and State of New York.

Present: H. H. Talcott, representing Coburn & Thacher, counsel for defendants; Thomas A. Banning, representing the complainants.

By agreement of parties, further proceedings were adjourned in this case till Wednesday, February 24, 1886, at 10 o'clock a. m., at the office of Bradley & Co., in said Syracuse.

WEDNESDAY, *February* 24, 1886.

391 Met at the office of Bradley & Co., pursuant to adjournment.

Present: As before.

It is hereby stipulated by and between the counsel for the respective parties in this cause that the testimony herein may be taken by a stenographer and afterwards may be reduced to writing, signed by the parties, and duly certified by the notary, the same as if taken in long-hand, and that the testimony taken in this manner shall have the same force and effect as if taken in the usual manner in long-hand.

Cross-examination of C. C. BRADLEY by THOMAS BANNING, Esq., counsel for complainants:

X Q. 1. You spoke of sending to the defendant an old machine some time about March, 1885. What kind of a machine was that?

Ans. Forward-bar mower like model—like Defendants' Exhibit Model of Bradley 1863 Front-Cut Mower.

X Q. 2. Why did you send them that machine?

Ans. Because they had written to us.

X Q. 3. How did they come to know that you had such machine?

Ans. I can't tell you, sir.

X Q. 4. Was that machine like this model in all respects? When I say this model I mean the one above identified, as there is no other one present.

Ans. Yes, sir.

X Q. 5. When was that machine made?

392 Ans. I think it was in the year of 1863–'64—in the winter.

X Q. 6. What enables you to fix the date of the manufacture of that machine sent to the defendants?

Ans. We never made any machine or sold any after 1864 of this type of machine, except to clean up the product that was made during that year.

X Q. 7. Was that machine like this model patented?

Ans. No, sir; not that I know of.

X Q. 8. When was this model before us made?

Ans. Winter of '63–'64.

X Q. 9. Do you mean that this identical model was made in the winter of 1863–'64?

Ans. Yes, sir; I think there were five of them altogether.

X Q. 10. Why were they made?

Ans. For the purpose of selling the machine.

X Q. 11. Is this model, in every respect, just as it was made originally, except the seat, which appears to be new?

Ans. It is the same, with the exception of the seat and lever.

X Q. 12. When were they made?

Ans. I don't know as I can answer you when they were made. I do not know whether we made them or whether they were made by the parties from whom the model was received. They are identical

with those that were on the machine. We can produce you a lever and seat and springs as they were used on the machine in 1863 and '64, or I can produce you one of each.

393 X Q. 13. Who was the inventor of the features shown in this model, particularly those which relate to the attachment of the sickle bar to the other portions of the machine?

Ans. I presume Mr. M. G. Hubbard claimed to be the inventor.

X Q. 14. Where is he?

Ans. I don't know, sir.

X Q. 15. Why did Mr. Hubbard not have them patented, if you know?

Ans. I can't tell you, sir.

X Q. 16. He had patents on other featuresi n mowing machines at that time?

Ans. Yes, sir.

X Q. 17. Were you operating under some of his patents?

Ans. Yes, sir.

X Q. 18. How many patents?

Ans. I cannot tell you.

X Q. 19. How many mowers like this model were manufactured, as you have stated, in 1863 and 1864?

Ans. One thousand.

X Q. 20. To whom were they sold?

Ans. Everybody who wanted to buy.

X Q. 21. Can you mention any names of farmers?

Ans. I can if you will let me produce my books.

By Mr. BANNING: You may produce your books and refer to the names of farmers, and attach the names of your agents and

394 some farmers who bought them, if you conveniently can. As I understand, the names of the agents will not be difficult to procure.

X Q. 22. As I understand, the first one of these machines that was sent out was the one shown in the receipt book as having been sent out on September 7, 1863, to L. L. Belden, Cleveland, Ohio. Is that correct?

Ans. I think it is—that is, to my customer. Of course during that summer we done experimenting with this machine to perfect it, to see if we could make any improvement to it for the coming year. Those machines, of course, were not sold.

X Q. 23. Was this machine of September 7, 1863, sold?

Ans. Yes, sir; sold to Mr. Hubbard; charged to his account.

X Q. 24. What was Mr. Belden, if you know; was he one of your agents?

Ans. No, sir; no agent of ours.

X Q. 25. Do you know what his business was?

Ans. I do not.

X Q. 26. What time did you commence to build this machine sent out on September, or one of that kind?

Ans. I can't give you a definite date of that—no further than

this: That we knew this—that we made machines and worked them through the harvest with our own teams, experimenting.

X Q. 27. What time do you mean by the harvest?

Ans. I mean the 25th of June till probably fall. We do that every year, up to the present time, even when we think they are almost perfect—up to frost time.

395 X Q. 28. How many did you make like this model in the year of 1863?

Ans. Well, sir, I can't answer that question definitely.

X Q. 29. You have mentioned three as appearing to have been sent out according to your receipt book.

Ans. I guess not.

X Q. 30. One to Belden and two to Hulshizer, Kinney & Co. Is not this correct, according to the entries upon your receipt book?

Ans. That is, two machines and a part of another. The shipment to Hulshizer was one machine and part of another as patterns of experiments for him to build after.

X Q. 31. What was Hulshizer, Kenny & Co.—manufacturers, agents, or what?

Ans. Manufacturers.

X Q. 32. Was that machine sold to them?

Ans. Yes.

X Q. 33. Did they make any like it afterwards?

Ans. I think they did.

X Q. 34. You say you made a thousand in 1864. Please state why you discontinued to make them.

Ans. We had some difficulty with Mr. Hubbard in relation to the royalty of $7.50 for a machine which we would not stand.

X Q. 35. Were you paying a royalty of $7.50 on a machine before you made this machine?

Ans. Yes, sir; and sometimes higher.

X Q. 36. You paid him any royalty on account of the features shown in this model, did you?

Ans. I didn't say so. I said we discontinued making the
396 machine in 1864 because we would not pay the royalty of $7.50.

X Q. 37. As I understand it, this $7.50 was on account of his other patents and not on account of the features shown in this model. Am I correct?

Ans. Well, I don't know whether you are or not.

X Q. 38. Did you pay him any royalty on features which were not patented?

Ans. I think I paid him at least $60,000 on features which were not patented.

X Q. 39. On features which were not patented at all?

Ans. On features which he claimed were patented, but of which he never could produce any satisfactory evidence that they were patented.

X Q. 40. Did he claim that the features shown in this model, particularly those which relate to the attachment of the finger beam to the frame, were patented?

Ans. I don't think that he did. He always had a very blind and deceptive way of doing his business.

X Q. 41. Did you ask him to have these features patented—these features shown in this model patented?

Ans. I don't know that I did.

X Q. 42. I will ask you if you have never had any conversation or correspondence with Mr. Alvaro B. Graham in relation to his patent and to machines which you were manufacturing along or about the year 1880 and 1881 and 1882?

By Mr. TALCOTT: Objected to by counsel for defendants as immaterial.

397 Ans. I have had some correspondence with him. I cannot give you the dates without referring to my letter books—my copy books. I also had some conversation with him in my office. I also made a definite arrangement with him so that I could use his patent for $250, and when I asked him to make the papers here in Syracuse he wished to defer it until I came to Chicago and saw the Bannings. When there Mr. Graham refused to make good for the $250; therefore I don't use his devices, as his patent expired.

X Q. 43. Was not the $250 which you have mentioned an offer on your part which he told you he would consider?

Same objection.

Ans. Yes, sir; I made the offer and he accepted it verbally.

X Q. 44. Will you produce and attach to this deposition copies of all correspondence between yourself and Mr. Graham and between yourself and the Bannings in relation to this matter?

Ans. No, sir.

By Mr. TALCOTT: I wish to put in an objection as immaterial.

Ans. I would do it but for this reason: Because he treated me very ungentlemanly; and after I wrote to him about it, stating to him that I was building a machine which I thought would be using his devices which had been sustained by the courts, although I thought he was not entitled to them, and the coming to my office and accepting the price of $250, and afterwards refusing to complete the contract.

398 X Q. 45. I see that some names have just been handed you. Please state whether they are names of agents or farmers who bought or had sent to them machines like this model in 1864. If so, will you please read them to the stenographer?

Ans. These are our agents. Their names are S. T. Du Bois, Hudson, N. Y., one forward bar, June 22, 1864; Hazelton & Lake, Sherburne, Vt., 24 forward bars, June 20, 1864; to the same parties, Hazelton & Lake, 25 forward bars, during July, 1864; P. Lambert, Hudson, N. Y., one forward bar, June 10, 1864; C. Bartholomew, Aetna, N. Y., one forward bar, September, 1864; E. W. Strong, Vergennes, Vt., one forward bar, May 31, 1864, 40 forward bars during June, 1864, and 12 forward bars, July 7, 1864; George Benedict, Verona, N. Y., 10 forward bars during June, 1864, and two forward

bars during July, 1864; J. C. Richardson, Westminster, Vt., 24 forward bars during June, 1864, and three forward bars during September, 1864.

X Q. 46. Did you or the firm of C. C. Bradley & Son send out circulars or pamphlets showing your structures and machinery during the years 1863 and 1864?

Ans. Yes, sir.

X Q. 47. Have you any of those circulars or pamphlets now?

Ans. I don't know; we can look and see.

X Q. 48. Will you kindly examine and see whether you have any now? And, if so, allow me to look at them.

Ans. Yes, sir.

C. C. BRADLEY.

399 ROMYN HAMBLIN, the next witness produced on the part of the defendants, being duly sworn, deposed and testified as follows in answer to the questions propounded to him by defendants:

Q. 1. What is your name, age, residence, and occupation?

Ans. My name I have given; my age is 65; my residence, Syracuse; occupation, a pattern-maker for Bradley & Co.

Q. 2. How long have you been with Bradley & Co. or their predecessors?

Ans. Since the fall of 1863, with two or three months' exception.

Q. 3. Look at Defendants' Exhibit Model of Bradley 1863 Front-Cut Mower, and state whether or not you recognize it, and, if so, what it represents.

Ans. Well, sir, it represents a machine called the Hubbard forward bar at the time it was made.

Q. 4. Who made this model, if you know?

Ans. I made the parts which are made of wood.

Q. 5. Who made the other parts, if you know?

Ans. I know the man. His name is Sharp.

Q. 6. When was this model exhibit made?

Ans. Well, the wood part of it was made in the late fall, perhaps October or November, of 1863; possibly in November, but either in October or November.

Q. 7. From what was this model made?

Ans. I took my figures to make the model from a practical machine standing in the building at the same time—standing across the way in Bradley's store-house.

400 Q. 8. Did you say that this Defendants' Exhibit Model of Bradley 1863 Front-Cut Mower is a correct model (in 1863) of a full-sized machine that was in Bradley & Co.'s warehouse at that time?

Ans. As near as I can make it; yes, sir.

Q. 9. In this model just above referred to I notice the push bar is connected to the finger bar or shoe by means of a slotted plate and bolt, and that it is loosely connected by this method. You may state whether in this respect this model is a correct representation of the machine.

Ans. It was made from the other as near as I could make it.

Q. 10. You may state whether you have personally used or tried in the hay field any mowers which were like this model.

Ans. Yes, sir.

Q. 11. Whereabouts?

Ans. In the State of Wisconsin.

Q. 12. When?

A. Well, I can't answer definitely, but I think in 1865.

Q. 13. Where has this model exhibit been kept since it has been made?

Ans. Well, I don't know, but this model has been kept—some of them has been kept—in this place—in this manufactory—since they were made.

Q. 14. How many models like this were made, and for what purpose were they made?

Ans. I am very sure that there were twelve made for the purpose, I suppose, for the agents to represent the machine.

401 Q. 15. You mean by that that the agents sold the machine from the model?

Ans. Help sell the machine, I suppose.

Cross-examination by Mr. BANNING:

X Q. 1. Where are any others of those twelve models that were made like this one?

Ans. I don't know where they are; I can't tell; some of them were destroyed at the time of the fire here.

X Q. 2. You do not know where there is another one like this?

Ans. No, sir.

X Q. 3. Do you know the names of the parties to whom they were sent or given?

Ans. No, sir.

X Q. 4. Is this model just like it was when it was first built?

Ans. With the exceptions of this lever and the seat, I think, it is the same, and they represent the other.

X Q. 5. The models were all alike?

Ans. So far as I made them they are all alike.

X Q. 6. You say you operated a machine like this model in 1865 in Wisconsin?

Ans. I think '65; I can't swear to the exact date.

X Q. 7. As you recollect the date?

Ans. Yes, sir.

X Q. 8. Was it in all respects like this model?

Ans. I suppose it was; I know nothing to the contrary.

X Q. 9. Did you ever see a machine like this model operated before the one you operated in Wisconsin?

402 Ans. I can't say that I ever did.

X Q. 10. In operating this machine in Wisconsin how was this bolt and nut that passed through the push bar and the slot on the rear end of the shoe; was it screwed on tight, so as to hold the bar fast and rigid, or was it loose? State how it was in that respect.

Ans. Well, it was loose in some instances and it was rigid in some instances, according to the face of the land on which I operated it. In case of rough or what they called out there gopher knolls I operated it with that loose. In case it was smooth land I made it rigid.

X Q. 11. Then when you came to a piece of rough land you would loosen this bar, and when you came to smooth land you would tighten it again?

Ans. I would; when I went into a smooth field I tightened it, and when I went into a field that was rough I loosened it.

X Q. 12. How about fields where it was partly smooth and partly rough?

Ans. I would govern the machine according to the biggest part of the land.

X Q. 13. This slot and bolt enable the points of the finger guard to be raised and lowered, so as to cut high and cut low, and to be fastened in any desired position, do they not?

Ans. They do.

X Q. 14. Is not that the object of this slot and bolt, to enable the points to be raised and lowered and fastened at any desired point, as I have explained?

Ans. It was made to be fastened or flexible or rigid as the operator wished.

403 X Q. 15. Did you ever talk with farmers or agents about this machine?

Ans. Not much; I never had a great deal of experience with it.

X Q. 16. Do you know why Mr. Bradley quit manufacturing machines like this model?

Ans. Nothing more than you have heard to-day. I have heard Mr. Bradley's talk; that is all.

R. HAMBLIN.

HERMAN JOHN BIERHART, the next witness produced on the part of the defendants, having been duly sworn, testified as follows in answer to questions propounded to him by the counsel for the defendants:

Q. 1. What is your name, age, residence, and occupation?

Ans. My name you have; 42 years old; I am a forger; my residence, Syracuse, N. Y.

Q. 2. With what house are you connected?

Ans. Bradley & Co.

Q. 3. How long have you been with Bradley & Co., or their predecessors?

Ans. Since the 2nd day of July, 1880. I commenced here.

Q. 4. Look at the model "Defendants' Exhibit Model of Bradley 1863 Front-Cut Mower," and state what it represents, if you know.

Ans. This is a mowing machine that they called at the time they built it "The Hubbard Forward Bar" or front-cut mower, built in the years 1863 and 1864.

404 Q. 5. Do you recollect of machines being built by Bradley

& Son or Bradley & Co. in 1863 and 1864, of which this model is substantially a correct representation?

Ans. Yes, sir; in every particular, as far as I can recollect details.

Q. 6. What work, if any, did you do on such mowers?

Ans. I have done the forging of the wrought-iron parts; for instance, push bar, brace pitman, and these eyebolts, and that eyebolt there and this here, and shifters, and this bolt here that was made at the time.

Q. 7. Did you know of one of these old mowers having been shipped to the Plano Manufacturing Company?

Ans. I can't remember exactly that name, but there was a mower shipped about a year ago; never looked it up; I don't remember the date. They called my attention to keep the parts together. I done so. The mower was shipped to Chicago, or some place.

Q. 8. Do you know where that old mower that was shipped came from?

Ans. No, sir; I don't.

Q. 9. Who built it?

Ans. It was built by Bradley & Co. It was not at that date Bradley & Co., but it was the same firm.

Cross-examination by Mr. BANNING:

X Q. 1. State when you first saw this identical model before you.

Ans. I can't tell.

405 X Q. 2. When did you see models exactly like this one before you?

Ans. I think I saw models in the manufacturing progress—that is, being made—in the year or in the spring of—in the fall of 1863 and spring of 1864. At that time there was a model-maker to work here, and he is the one who made it.

X Q. 3. Did you examine the models particularly, so that you can state positively that this is precisely like those made in the fall of 1863 and spring of 1864?

Ans. No, sir.

X Q. 4. When did C. C. Bradley & Son make mowing machines like this model?

Ans. The forward-cut mower was made in 1864, and I think there was some—there were some made in 1863.

X Q. 5. Were the forward-bar Hubbard mowers that you have mentioned as made in 1863–'4 precisely like this model?

Ans. Yes, sir; as near as I can recollect. I can't tell exactly.

X Q. 7. Did you ever see a mowing machine like this model in operation?

Ans. I don't think I did.

X Q. 8. Did C. C. Bradley & Son during the years 1863 and 1864 send out any circulars or pamphlets descriptive of their machinery?

Ans. Yes, sir.

X Q. 9. Have they any such circulars or pamphlets now?

Ans. I can't tell.

H. J. BIERHART.

406 ALBERT BRAMER, the next witness produced on the part of the defendants, being duly sworn, deposes and says in answer to questions propounded to him by the counsel for the defendants:

Q. 1. What is your name, age, residence, and occupation?

Ans. My name is Albert Bramer; residence is Onondaga Valley, N. Y.; occupation is market gardener at the present time; age, 57 years last October.

Q. 2. Did you ever live at Fabius; and, if so, during what years?

Ans. I lived there from the time I was ten years old until sixteen, seventeen years ago this spring, when I moved away from there.

Q. 3. Were you living at Fabius from 1860 to 1865?

Ans. Yes, sir.

Q. 4. You may state the relationship between yourself and Frank Bramer, the patentee of letters patent No. 51546, dated December 19, 1865, for improvement in harvesters, an office copy of which is made an exhibit in this case, and is marked "Defendants' Exhibit Bramer 1865 Patent."

Ans. He was a brother-in-law of mine.

Q. 5. Is Frank Bramer living now?

Ans. No, sir.

Q. 6. Where was Frank Bramer at the time this patent was issued?

Ans. Fabius.

Q. 7. How far from Frank Bramer did you live at that time?

407 Ans. A little less than half a mile; probably a few rods less than half a mile.

Q. 8. What was your business in those years?

Ans. Farming.

Q. 9. What was your brother's business at Fabius from 1860 to 1865?

Ans. Carrying on a general machine shop, manufacturing threshing machines, tread powers, and so forth.

Q. 10. How often would you be in your brother's place of business in those years?

Ans. Sometimes it might be a week, ten days, or two weeks that I wouldn't be in the shop, and other times it would be quite often. My blacksmithing was done there.

Q. 11. When did you first know of your brother's first experimenting in harvesters?

By Mr. BANNING: Counsel for complainant objects to any testimony from this witness as to the construction and operation of any machine prior to the issuance of the patent sued on, containing or supposed to contain the invention described and claimed in the first and second claims of the patent sued on, for the purpose of anticipating or invalidating said first and second claims, for the reason that the name of the witness is not set up in the answer, as required by the statute.

Ans. In the fall or the latter part of the summer of 1862.

408 Q. 12. You may give a brief description of the experiments or the construction of the harvester of 1862, especially stating the kind of a machine it was—that is, whether it was a rear-cut or forward-cut machine. State the manner in which the finger beam or bar was attached to the machine.

Ans. The machine was iron frame, nearly round. What was called planetary gear or tub gear was the gearing for driving the machine. The finger bar was called forward cut. Forward of the driving wheels, on the right-hand side of the machine, brace connections was hinged to allow the bar what was designated by my brother at that time a wabbling motion, a rolling motion. There was a main brace that run through and connected with the frame under the pinion shaft, on the left-hand side of the machine, the rear or push brace on the rear or right-hand side of the machine running forward to the main brace with the hinge or what he termed at that time the main-brace block to receive the rear brace, giving the finger bar a chance for the finger or guards to throw up over obstructions, but so arranged that it couldn't go into the ground—couldn't turn down only on a level.

Q. 13. State whether or not you personally tested this machine in the fall of 1862 in cutting grass.

Ans. This machine was tried in grass that had been frozen along very late in the fall. There wasn't much grass to it; just enough to see a little grass in the field; no grass to mow at the time.

Q. 14. Who was present at the time this machine was tested?

Ans. I don't know. There was my father and a brother-in-law of mine, Frank, myself, and my two little boys.

409 Q. 15. Where was this trial made?

Ans. It was about a mile from the shop.

Q. 15. Whose horses were employed in making this trial?

Ans. My team.

Q. 17. Is your father living?

Ans. He is dead.

Q. 18. Your brother-in-law?

Ans. Also.

Q. 19. Both dead?

Ans. Yes, sir.

Q. 20. What date do you fix upon as the date of this trial?

Ans. The last of November of the fall of 1862.

Q. 21. How do you fix these dates?

Ans. My wife was sick at the time and she died the first of January, 1863, and this brother-in-law was living at Homer at this time, and he and my sister came to visit me. He thought he would try the machine. It was not completed. He tried the mower about a mile from the shop.

Q. 22. State whether or not this test that you made was satisfactory.

Ans. Not wholly.

Q. 23. What was the matter?

Ans. Well, it was picked-up gear. I think the gear he used in that machine was taken out of a Buckeye, and the wheels he took

out of a Farmer machine. He was encouraged enough to go on and build it the next year.

Q. 24. How long, prior to this test, did you know of your brother's working upon this harvester?

410 Ans. I think he was to work at it several months. His facilities for doing work was very limited. He tried hard to get a machine that could be tried in grass that fall, but did not succeed.

Q. 25. Did you see him working upon mowers frequently at the shop?

Ans. Yes; occasionally I was there.

Q. 26. Do you know whether your brother afterwards obtained a patent upon substantially the machine that you tested in the fall of 1862?

Ans. I think he did; I understood so from him; I didn't see the letters which he had patented for several years afterwards. The patent was on the machine similar to the one he built that fall. He never changed, for a great many years, the general principle of the machine.

Q. 27. Look at the Defendants' Exhibit Bramer 1865 Patent, and state whether it represents substantially the machine constructed by your brother in the latter part of the summer or fall of 1862.

Ans. The frame that he made first was a little different from this, but the bracing is the same.

Cross-examination by Mr. BANNING:

X Q. 1. Please describe the construction and operation of that first machine again.

Ans. Well, the construction of the machine or the material?

X. Q. 2. No; I mean the way it was built.

Ans. It was built with what was called planetary gear—that is, two travelers on arms traveling around a stationary tub, the

411 teeth meshing into a pinion on a bevelled gear, and that bevelled gear meshing into a pinion on the pinion shaft, to which knives were attached by a pitman, and the sickle bar or finger was at the right hand of the machine forward of the drive wheels, connected with the frame by a main brace at the left hand of the machine, or under the pinion shaft, and braced from the rear end of the machine, on the right-hand side of the main brace, by a rear brace. The braces were so arranged that the finger bar could turn up or give a rolling or wabbling motion to the bar to run over obstructions and out of dead furrows.

X Q. 3. Could the points of the finger guards turn down below the level or the horizontal?

Ans. It was not made so that they could.

X Q. 4. When was this machine finished?

Ans. It was not practically finished until the harvest of 1863. At the time of the first trial it hadn't a name.

X Q. 5. You say that at this first trial the machine was not finished?

Ans. No; I don't think it was painted.

X Q. 6. Was it finished in all other respects?

Ans. Well, I don't think it was; I don't think that the seat spring was on. I think he only put in a piece of board, but he had the plan on which he manufactured afterwards.

X Q. 7. What changes did he make, if any, after this trial in the braces and other parts by which the sickle bar was attached to the frame of the machine—I mean during the next summer?

Ans. I don't think he made any change during the next summer.

412 X Q. 8. Do you mean that the machine as it was finished and used during the summer of 1863 was the same as it was in this trial in November which you have described?

Ans. Yes, sir; I think it was the same, without any great changes; small changes, but not material.

X Q. 9. You don't remember what those changes were, if there were any?

Ans. No; I don't; I don't think there were any changes in the machine.

X Q. 10. What was your brother's business at the time?

Ans. He manufactured sweep powers, clover mills, separators and tread powers, buzz-saws, cross-saws, but not harvesters or reapers.

X Q. 11. You say that your wife was sick at the time of this trial?

Ans. Yes, sir.

X Q. 12. How long did she live after this trial?

Ans. She died on the 12th of January, 1863.

X Q. 13. That date is so firmly fixed in your mind, is it, Mr. Bramer, that you are sure that there is no mistake about it?

Ans. I don't see how there can be.

X Q. 14. I mean more particularly as to the year in which your wife died?

Ans. Yes, sir; I married the present wife in December, '63.

X Q. 15. Are you a machinist?

Ans. Yes, sir.

413 X Q. 16. Are you accustomed to reading drawings of patents and machinery?

Ans. Somewhat.

ALBERT BRAMER.

It is stipulated that when the testimony taken herein is signed and properly certified it may be mailed by the notary to Coburn & Thacher, Chicago, to be filed by said Coburn & Thacher.

I, Pitt M. Dyer, special examiner, duly appointed by the circuit court of the United States for the northern district of Illinois to take such proofs as either party may offer before me in this suit, certify that on the several days named in the deposition hereto annexed I was attended by the counsel and the witnesses aforesaid, C. C. Bradley, Romyn Hamblin, Herman John Bierhart, and Albert Bramer; that the said witnesses were duly sworn and examined,

and the depositions were reduced to writing and read to the witnesses and by them subscribed in my presence.

Dated March 16th, 1886.

PITT M. DYER,
Special Examiner.

414 *Notice.*

United States Circuit Court, Northern District of Illinois. In Equity.

ALVARO B. GRAHAM and HUGH GRAHAM
vs.
THE PLANO MANUFACTURING COMPANY *et al.*

To Messrs. Banning & Banning, solicitors for complainants:

Please take notice that on Friday, the 26th day of February, A. D. 1886, at 10 o'clock a. m., we shall proceed to take testimony on behalf of defendants, to be used upon the hearing of the above-entitled cause, at the office of Davenport & Hollister, No. 17 First St., Troy, N. Y., before William H. Hollister, Jr., a notary public, or other competent officer.

The taking of testimony will continue from day to day until completed.

You are invited to be present and cross-examine.

Chicago, Illinois, February 11th, 1886.

COBURN & THACHER,
Solicitors for Defendants.

Service of above notice by copy acknowledged this 12th day of February, A. D. 1886.

Troy, N. Y., February 26th, 1886.

BANNING & BANNING,
Solicitors for Complainants.

415 United States Circuit Court, Northern District of Illinois. In Equity.

ALVARO B. GRAHAM *et al.*
vs.
THE PLANO MANUFACTURING COMPANY *et al.*

Pursuant to notice hereto attached, met at the office of Davenport & Hollister, No. 17 First St., Troy, N. Y., on this 26th day of February, 1886, at 10 o'clock a. m., to take testimony on behalf of the defendants in the above-entitled case before William H. Hollister, Jr., a notary public in and for the county of Rensselaer and State of New York.

Present: H. H. Talcott, Esq., representing Coburn & Thacher, counsel on behalf of the defendants, and Thomas A. Banning, Esq., of the firm of Banning & Banning, counsel for the complainants.

Whereupon the following proceedings were had:

Stipulation.

It is hereby stipulated and agreed by and between the counsel for the respective parties that the testimony under this notice
416 may be taken in short-hand, and may afterwards be reduced to writing and certified to by the notary before whom these depositions were taken in the same manner as if they were taken in long-hand and with the same force and effect, and the signature of the witnesses to be waived.

It is further stipulated that the notary, after duly certifying said depositions, may send the same to Coburn & Thacher, Ashland block, Chicago, Illinois, instead of sending it to the clerk of the court in which the said depositions were taken.

ABEL G. GOLDTHWAITE, a witness produced on the part of the defendants, being first duly sworn, deposes and says, in answer to questions propounded to him by the counsel for the defendants, as follows:

Q. 1. What is your name, age, residence, and occupation?

Ans. A. G. Goldthwaite; age, forty-eight; residence, Troy, N. Y.; occupation, mechanic.

Q. 2. With what firm or concern are you engaged at present?

Ans. W. H. Tolhurst and Son.

Q. 3. How long have you been in that concern or its predecessors?

Ans. I think since November, 1862.

Q. 4. Where were you prior to November, 1862, and after 1860?

417 Ans. Charles H. Kellogg; I think simply Charles H. Kellogg; no company to it.

Q. 5. Do you know Mr. James Pine?

Ans. I do.

Q. 6. How long have you known him?

Ans. Since 1858 or 1859; perhaps as early as 1857.

Q. 7. What was Mr. Pine's business in 1860—that is, to 1862?

Ans. He was inventing harvesters and mowing machines.

Q. 8. Where was his place of business from 1860 to 1862?

Ans. It was in the shop of Charles H. Kellogg's, on Mount Ida, Congress street, Troy—a firm that is well known all over the States.

Q. 9. What was Mr. Kellogg's business at that time?

Ans. He manufactured currycombs, and also harvesting machines and a number of other machines, boring machines, and, I think, mortising machines.

Q. 10. What was your particular business at that time; what duties did you perform at Mr. Kellogg's?

Ans. I made drawings and patterns.

Q. 11. You were then and are now a pattern-maker and draughtsman?

Ans. Yes, sir. I have not made many patterns lately.

Witness shown drawing in "Defendants' Exhibit Pine 1864 Patent."

Q. 12. Look at that drawing and state whether you have ever seen a model which these drawings correctly represent.

418 The counsel for the complainants objected to any testimony from this witness as to any machines or models prior to the complainants' patent, for the purpose of anticipating or invalidating the same, sued on, which contain or are supposed to contain the inventions described and claimed in the first and second claims of the patent sued on, for the reason that the name of the witness has not been set out in the answer as required by the statute.

Ans. I have.

Q. 13. When and where did you see it, and who made such model?

Ans. I think Mr. Pine made it; and I saw it at Kellogg's factory on the hill, and it was prior to my leaving there in November, 1862.

Q. 14. Did you know at that time of Mr. Pine's business, and what machines he was making, when you were there at Kellogg's?

Ans. I believe I assisted him in the construction of all of them.

Q. 15. After you left Kellogg's, in November, 1862, did you continue to assist Mr. Pine in the manufacture of his models, and know as much about them?

Ans. I didn't know as much about them, only occasionally made patterns for him; was not connected directly with him; I was in a shop quite distinct.

Q. 16. Do you know of Mr. Pine's being the inventor and patentee of a large number of mowers and harvesters?

Ans. Certainly.

419 Q. 17. Do you recollect of having seen mowers constructed by Mr. Pine in which the finger bar was hinged to the coupling bar or drag bar in front of the machine?

Ans. Yes, sir.

Q. 18. Were Mr. Pine's machines front or rear cut machines?

Ans. Some of them were front and some of them were rear.

Q. 19. Can you fix the time that you saw a machine constructed by Mr. Pine in which the finger bar was hinged to the coupling bar or drag bar, as he calls it, so that you could swing up the cutter bar vertically?

Ans. I am sure it was previous to November, 1862, as after that time I did not go out to the field trials with their experimental machines.

Q. 20. How do you fix the time as prior to November, 1862?

Ans. After that time, in the summer of 1863, I was with Mr. Tolhurst, and consequently I did not go out with them when they made their experimental trials in the fields. When I was with Mr. Kellogg and they were taking a machine out for an experimental trial I always went out with them; of course after I left there and came down town I was not there.

Q. 21. Do you recollect of Mr. Pine's machines that he built prior

to that time having a push or brace rod to assist in sustaining and keeping in place the finger bar?

Ans. Yes, sir; they had. (Referring to Defendants' Exhibit Pine 1864 Patent.) You refer to the brace marked "H" there?

420 Q. 22. I do. How was this brace rod that corresponds to "H" in the exhibit secured to the machine?

Ans. By a flexible joint.

Q. 23. Do you know the particular name of these machines that had a finger bar hinged to the front drag bar or coupling bar?

Ans. He had a number of names—the "Yeoman," the "Farmer," the "Planet." The Planet, I think, did not have it. I think there were others that I do not remember.

D. Q. 24. Did this machine that had a hinged finger bar also have a device that corresponds to "H" in the Pine exhibit?

Ans. I am sure it did.

D. Q. 25. Do you recollect of Mr. Pine's ever constructing a harvester during the time you were at Mr. Kellogg's with a rear cut?

Ans. I do; it had a rear cut for reaping, and another finger bar forward for mowing—combined mower and reaper.

D. Q. 26. Do you know what year this was?

Ans. Well, I think it was between January, 1860, and November, 1862, because that was all the time I was there.

D. Q. 27. Can you describe this machine generally?

Ans. Not definitely.

Cross-examination by Mr. BANNING:

X Q. 1. Mr. Pine made a number of different styles of mowing machines, did he not?

421 Ans. He did.

X Q. 2. Did these different styles of mowing machines differ somewhat in construction as well as in the names he gave them?

Ans. They did, materially.

X Q. 3. During what years was he making different styles of mowers?

Ans. Well, when I was with him was from 1860 to late in 1862.

X Q. 4. How many mowing machines did he make during that time?

Ans. I could not say. Do you mean how many different kinds?

X Q. 5. No; the machines of different manufacture—whether you know how many had been made?

Ans. I do not know.

X Q. 6. When was it you say you saw a model like the machine represented by the drawings of this Pine 1864 patent?

Ans. I am sure it was previous to my leaving the shop in 1862.

X Q. 7. What was he doing with the model?

Ans. I don't know as I can exactly answer that question.

X Q. 8. Was he manufacturing the machine at that time?

Ans. I think not; I think he made the model before he did the machine.

X Q. 9. Did you prepare the drawings shown in this patent?

Ans. I did not.

422 X Q. 10. Did you make the model?

Ans. I did not; Mr. Pine made it himself.

X Q. 11. How do you come to recollect that it was like the drawing shown in this 1864 patent?

Ans. Well, there are a good many peculiarities about it that was somewhat remarkable.

X Q. 12. Have you ever seen that model since 1862 to the present time?

Ans. I do not think I have.

X Q. 13. You were shown the drawings of this patent, were you not, before you testified about the similarity of the model of these drawings?

Ans. I was.

X Q. 14. Without these drawings would you be able to recollect the features of that model?

Ans. Probably not all of them.

X Q. 15. This rod "H" in the drawings of this patent appears to have a swivel and flexible joint where it is connected to the plate "G," to which the finger bar is attached?

Ans. Yes, sir.

X Q. 16. In speaking of Mr. Pine's manufacture of a machine with a flexible connection, as you term it, was it a machine like these drawings of the 1864 patent?

Ans. I do not think it was in all respects.

X Q. 17. Was it like this drawing of the 1864 patent, except the swivel joint by which the bar "H" is connected to the plate or bar "G?"

Ans. I think it was.

X Q. 18. Are you positive that it was, and not different?

423 Ans. I am.

X Q. 19. How many machines did he make having that swivel connection?

Ans. I could not tell anything about that.

X Q. 20. Do you know what he did with them?

Ans. I suppose he sold them.

X Q. 21. Do you know nothing of your own knowledge?

Ans. Nothing of my own knowledge.

X Q. 22. When did Mr. Pine cease to manufacture mowing machines, if you know?

Ans. I do not know.

X Q. 23. Is he manufacturing them now?

Ans. I do not think he is.

Signature and second oath of witness waived.

Paid witness's fees, $2.00.

JAMES PINE, a witness produced on the part of the defendants, being first duly sworn, deposes and says, in answer to questions propounded to him by the counsel for the defendants, as follows:

Q. 1. What is your name, age, residence, and occupation?

Ans. James Pine; residence, Troy, N. Y.; age, 71 years; my present occupation is building mowing machines this winter.

Q. 2. How long have you been engaged in inventing and building?

Ans. Since 1853.

Q. 3. How many different patents on mowing machines have you obtained or about how many?

424 Ans. Well, I can't tell precisely now; some eight or ten; somewhere along there.

Q. 4. Have you built styles of mowers upon which you have no patent?

Ans. Yes, sir. I would get up a machine and try it, and if it was worth it I would get a patent on it, and if it was not worth it I would not get a patent on it.

Q. 5. Where were you engaged in building machines from 1860 to 1864?

Ans. It was in Troy.

Q. 6. I mean the particular place.

Ans. From 1860 to 1862 I was on Ida Hill with Mr. Kellogg; I went from there down to Mr. Parmenter's, here in the city of Troy.

Q. 7. How many different kinds of harvesters and mowers did you manufacture or invent between 1860 and 1862, when you were with Mr. Kellogg?

Ans. Well, they were not invented, all of them, at the time. I carried out the result of several years' planning and investigation that I then carried out, and put the models together, with Mr. Kellogg, when I was up there. I can't tell you now. Let me see; there was the Farmer, the Yeoman, the Planet, the Comet, and the Grasshopper. The combined reaper and mower—we didn't name that; it was a nondescript.

Q. 8. State the year in which you constructed the combined reaper and mower referred to by Mr. Goldthwaite.

Ans. I think it was in 1862.

Q. 9. You may briefly describe this harvester and mower constructed by you in 1862.

425 The complainants' counsel objected to any testimony from this witness as to machines manufactured or used prior to the issuance of the complainants' patent sued on, for the purpose of invalidating or anticipating the same, which contain or were supposed to contain the inventions described and claimed in the first and second claims of the patent sued on, for the reason that the name of the witness was not set up in the answer as required by statute.

Ans. To do it as briefly as possible I have made a sketch, which I wish to attach to my deposition, in which "A" and "A" are the driving wheels, "B" the frame, "C" the finger board. "D" is the arm

hinged to the front of the main frame extending back to the finger bar and connected, hinged, by what I call a snipe bill. That is (indicating) the platform and the grain upon it. Upon the rod supported by the ground wheel was one of these swivels, being out of a line, so that in turning it would swing around. "E" is the platform. Let me sketch here. I am not much of a draughtsman. "F" represents some curved irons bolted to the rear end of the main frame on the near corner of the rear end. They were curved, bolted; bolted here (indicating) and curved up over in this position (indicating), one above and one below. A large screw running through these two (indicating) arms—at the ends of these two arms connected with a nut, hinged to one end of the finger bar—the nut was. The object of this arrangement was so as to place your
426 cutting apparatus, finger bar, and platform at a higher and lower position—to cut the grain higher or lower.

The counsel for the defendants here offers said sketch in evidence, and the same is received and marked "Defendants' Exhibit Pine Sketch."

The WITNESS: I am going a little further with the description of this. This bar "D" was curved so it drooped down below the axle, so as to give this finger bar, if the driving wheel was to drop down into a dead furrow or anything, it would not strike that arm. And it was swiveled here (indicating) so this finger bar could play either way and not have to reach through where it connected. It was always at the front end.

Q. 10. Are you the patentee named in the "Exhibit Pine 1864 Patent?"

Ans. Yes, sir.

Q. 11. I call your attention to the rod "H" in said exhibit, and ask you to state how said rod is secured in said machine and why it is secured in the manner shown.

Ans. Do you want this rear attachment here (indicating)?

Q. 12. Just state how it is secured—just answer the question.

Ans. Well, that rod "H" was secured at its rear end. Well, now for the life of me I can't tell whether there was a fork on the rear end, straddling the rear end of the frame or somewhere on the frame running back through, and then a pivot put through, or whether there were two slots in the arm, one for the pivot to work in this way and in the arm the other, but it was pivoted in
427 that slot and attached over by this pendent there (indicating), so as you lift that finger bar that could pass down in that slot in the line of your finger bar, so it could raise vertically. You may say that would draw the finger bar; that contrivance was for the benefit of it, as otherwise the finger bar would throw ahead, and that would cause a torsion or binding in the cutting apparatus. At the front it was pivoted to what I call the drag bar, pivoted as it is represented here and swivel-jointed, so as to allow the finger bar to be raised without any torsion or binding on this brace.

Q. 13. When did you first commence using rods like rod "H" in

exhibit, with swivel joint and attachment, for the purposes shown in the patent?

Ans. In 1860.

Q. 14. In what machine, if any, was that device "H" shown in the patent, having a swivel joint, used, and when?

Ans. It was used on what we called the Farmer machine first in 1860, and was used in successive years. It was used on the machine called the Yeoman in 1862; on the Grasshopper in 1862. It was used on the Yankee in 1863, and this combined reaper and mower in 1862.

Q. 15. State whether or not you have built machines in which the cutter bar was hinged to the drag or coupling bar in front of the machine.

Ans. When the finger bar was hinged to the drag bar?

Q. 16. Yes, sir.

Ans. Yes; I have built such machines.

Q. 17. When?

428 Ans. The Grasshopper was built in 1862; that was hinged there.

Q. 18. You may describe or state the devices which were used in the Grasshopper machine for the purpose of——

(Witness interrupting.)

Ans. Well, I thought I had a Grasshopper with me; I don't know what I have done with it.

Q. 18. (Continued.) Securing the cutter bar and steadying it in the machine?

Ans. The cutter bar was what we termed the sickle bar.

Q. 19. I mean the finger bar in the Grasshopper.

Ans. Well, to commence with the Grasshopper, that was what was termed a one-driving-wheel machine, having the main driving gear fixed in connection with the driving wheel. It is mentioned in the description.

Q. 20. I only ask how the finger bar is secured?

Ans. The drag bar was bolted to a vertical plate extending down towards the grass side of the machine—the drag bar did—and the finger bar was there hinged to this drag bar. I term it the drag bar because in my machines I hitched direct from this bar in connection with the pole, and that is why I gave it the term "drag bar." At the grain side of the machine was a little (what we term) support wheel. This finger bar or drag bar was attached at the center of the driving wheel. That is what was called a "center-cut machine." There was a brace connected with the pole of the machine in front of the cutting apparatus, curving out to the grain side of the machine, or grass side, and extending out backwards, drooping

429 down, to which this support wheel was connected, and this brace extended back of this support wheel to which this brace or push bar, as you term it, was hinged. Then this brace extended forward and connected to this drag bar by this joint.

D. Q. 21. What kind of a joint?

Ans. Well, swivel joint was what I termed it. Well, now, that, I

don't suppose, would be in evidence. I built this Grasshopper and I mowed from here to Massachusetts with it; went up the Hoosac Valley. When I went out I did not have this brace attached to it, and I found the torsion was so much on it that it wrenched this brace bar back and forth, and that is the reason that I afterwards applied this brace.

D. Q. 22. To what two-wheel machine, if any, did you apply a rod similar to the rod "H?"

Ans. Have not I told you to the Farmer and the Yeoman and the Yankee?

D. Q. 23. Were these machines that you have described all put into use in the field?

Ans. They were all tested, I think.

D. Q. 24. Were any of them sold or used by farmers?

Ans. Yes, sir; the Farmer machine, the Yeoman machine, and the Honest Abe.

D. Q. 25. How did you connect this rod corresponding to rod "H" with the cutter bar of the Yankee machine?

Ans. Well, it was connected the same as in the Grasshopper. There was but very little difference in that and the others. The support was half the size of the driver, and I used the driving wheel—derived power from it. It was, also, a center-cut machine.

430 Cross-examined by Mr. BANNING:

X Q. 1. In this sketch that you have made the finger bar is all in one piece, is it not?

Ans. All in one piece; yes, sir.

X Q. 2. In using that it was arranged so as to tilt. You mean that the end of the finger bar could elevate or depress?

Ans. Yes, sir; that is what I mean by it.

X Q. 3. Was the Grasshopper machine patented?

Ans. Yes, sir.

X Q. 4. Have you got a patent of that?

Ans. I supposed I had it about me, but believe I have not. Yes; this is the animal. The brace is not represented. I must have put the brace on after that or else it was neglected by the draughtsman. I know I did not know why I did it.

X Q. 5. This Grasshopper machine is represented by letters patent to yourself, dated October 27th, 1863, and numbered 40448, is it not?

Ans. Yes, sir; that is the date of the patent.

X Q. 6. In this October, 1863, patent, which represents that Grasshopper machine, and in this October, 1864, patent the finger bar was made so that it could be elevated in a vertical position when the machine was being driven from field to field, was it not?

Ans. Yes, sir—I don't know; about that time I got one patent on swinging around. I don't know but that was the one.

X Q. 7. The object of this swivel joint connecting the rod
431 "H" to the bar "G" is to enable the bar "G," and consequently the finger bar, to be raised up or let down to get at a higher or lower elevation, is it not?

Ans. That is one object.

X Q. 8. By means of this chain or rope that is shown here—for lifting this?

Ans. That is the lever to elevate your cutting apparatus.

X Q. 9. When did you cease to make mowing machines like this shown in the October, 1864, patent?

Ans. Well, I ceased building mowing machines entirely in 1865. I got into a row with the Buckeye Association and I stopped.

X Q. 10. Were the machines which you have termed the Yeoman, or Farmer, or Yankee, or Honest Abe patented?

Ans. No, sir; I used features that I had already got patented in other machines in making all these machines; in making some of them I used what I had already patented.

X Q. 11. But you took out no patent?

Ans. As they were built, if I built a machine, and as they were built if I saw that they were worth patenting, I patented them, and if they were not I did not.

X Q. 12. Did you take out a patent on this machine represented by your sketch?

Ans. No, sir.

X Q. 13. How many machines like this sketch did you make?

Ans. But two, I think.

X Q. 14. Did you sell them?

432 Ans. I don't think I did; I think they were not worth selling. I don't think I sold them; I think I changed them over. The rod appeared to prove a failure.

Redirect examination by Mr. TALCOTT:

R. D. Q. 1. Referring now to the patent under which you say this Grasshopper machine was made, I ask you if you put on this device like bar "H," secured in the same way, onto the Grasshopper machine made by you before the date of this patent?

Ans. Yes, sir; I did it when I got it back to the shop, after I discovered the necessity of it.

R. D. Q. 2. And in what year did you say this was?

Ans. 1862.

Signature and second oath of witness waived.

Paid witness fees, $4.00.

Hearing closed.

433 & 434 *Notary's Certificate.*

STATE OF NEW YORK, }
County of Rensselaer, } ss:

I, William H. Hollister, Jr., notary public in and for the county of Rensselaer and State of New York, hereby certify that, in pursuance of the notice hereto attached and the stipulation of the counsel for the respective parties, I was attended, at the office of Davenport & Hollister, No. 17 First street, in the city of Troy, N. Y., on

the 26th day of February, 1886, by the said counsel and witnesses mentioned in the foregoing deposition; that the said witnesses, to wit, Abel G. Goldthwaite and James Pine, were duly sworn by me before they were examined, and the said witnesses were then examined and their depositions were reduced to writing, but the same were not signed by them, such signing having been waived by the counsel aforesaid; that "Defendants' Ex. Pine's Sketch" was introduced in evidence during the taking of the said depositions, and the same is hereto attached.

Troy, March 3, 1886.

[SEAL.] WILLIAM H. HOLLISTER, JR.,
Notary Public.

435 *Notice.*

United States Circuit Court, Northern District of Illinois. In Chancery.

ALVARO B. GRAHAM *et al.*
vs.
THE PLANO MANUFACTURING COMPANY *et al.*

To Messrs. Banning & Banning, solicitors for complainants:

Please take notice that on Monday, the 6th day of June, A. D. 1887, at 10 o'clock a. m., we shall proceed to take testimony on behalf of defendants, to be used upon the hearing of the above-entitled cause, at Fabius, Onondaga county, N. Y., before Charles H. Wheaton, a notary public, or other competent officer.

The taking of testimony will continue from day to day until completed.

You are invited to be present and cross-examine.

Chicago, Ills., June 1st, 1887.

COBURN & THACHER,
Solicitors for Defendants.

Service of above notice by copy acknowledged this 1st day of June, A. D. 1887.

BANNING & BANNING,
Solicitors for Complainants.

436 *Rebuttal Testimony.*

United States Circuit Court, Northern District of Illinois. In Equity.

ALVARO B. GRAHAM *et al.*
vs.
THE PLANO MANUFACTURING COMPANY *et al.*

Testimony taken on the part of the defendants, pursuant to notice, before Chas. H. Wheaton, notary public, at Fabius, N. Y., June 6, 1887.

Present: Thomas Banning, Esq., of counsel for complainants, and

H. H. Talcott, Esq., representing Messrs. Coburn & Thacher, counsel for defendants.

ORSEMUS G. STILLMAN, a witness produced, sworn, and examined on the part of the defendants, deposes and testifies as follows in answer to questions by Mr. TALCOTT:

Q. 1. State your name, age, residence, and occupation.

Ans. Orsemus G. Stillman; age, 56 years; residence, Hornellsville, Steuben Co., N. Y.; occupation, pattern and model maker and general jobber.

Q. 2. State whether or not you are in business for yourself and how long you have been in business?

Ans. A little over three years ago I began business for myself.

437 Q. 3. Did you ever live at Fabius, N. Y.; and, if so, during what years did you reside at that place?

Ans. I did; from April 1, 1859, to July (about the middle), 1864.

Q. 4. How do you fix this as the date at which you resided at Fabius?

Ans. I moved to De Ruyter after being married in Sept., 1856. I lived there 2½ years until the spring of 1859; I then moved direct from De Ruyter to Fabius.

Q. 5. What work did you do when living at Fabius, and where and for whom did you work?

Ans. I carried on a cabinet shop in company with Hiram Pendall. After a few months I found out he was not the man I wanted and bought him out. I then carried on the shop myself. I hired Truman Greene to work for me. This was in 1859. This man continued to work for me until the summer of 1861, when I sold out to him. During that summer, in July or August of 1861, Mr. Frank Bramer came to me and said he wanted I should go up and help him a few days. From that time forth I worked for him until March, 1864.

Q. 6. To what religious denomination do you belong?

Ans. Seventh-Day Baptist.

Q. 7. That is, you observe as the Sabbath the seventh day of the week, and hold that it is morally right for you to work the remaining days of the week.

Ans. I hold that the Bible requires to work the other six days.

Q. 8. During the time you worked for Frank Bramer what was the nature of your employment and, generally, what work did you do?

438 Ans. I was the only man he had who did any iron machine work, and consequently I did that kind of work and worked at patterns, being a cabinet-maker. I also worked at general wood-work and on horse-power threshers, clover hullers, and any repairs that came in.

Q. 9. During the time you were employed at Frank Bramer's, from the summer of 1861 to the spring of 1864, did Frank Bramer experiment in or build any mowing machine or mowing machines, and did you assist him? If yea, state the circumstances, what you

first knew of it, what you did, how such experiments came to be made or how such machines came to be built, and give the dates.

Ans. I'll state just how it came to me. Frank Bramer came to me from the Methodist church (he led the choir at that time) on Sunday, in the summer of 1862; the exact month I can't give, but it was late in the summer. He came through his father's house to the shop. He said—the very first words he said—"Stillman, I'm going to get up a mowing machine. I never thought I would have anything to do with mowing machines except to repair as I am now doing, but during the sermon to-day the idea came to me to get up a mowing machine on the tub-gear principle." He went on talking further about it. That was about the extent of it that day, but the next day he commenced to make drawings for his machine for the gearings. He set three men to work immediately on the patterns, myself with the rest—myself and two others. We made that week what patterns he thought was necessary for his first experiment; took them to Manlius in the night; it was a common custom for
439 him to go in the night, so he could get them cast and take them home with him the next night.

Q. 10. You may describe the machine so constructed and tell when it was completed, describing particularly by what means the finger bar was attached to the frame of the machine.

Ans. The machine is made with a wooden frame, with wheels borrowed from another machine, some of the gearing from Albert Bramer's Buckeye machine, the pole hitching under the axle-tree to the back end of the frame. The finger bar or cutting bar was attached by a cross-brace in front of the machine, under side, and the push bar attached with a snipe bill, back end of the frame, under side, in such a manner as to give the bar a flexible joint. I can't give a minute description of the attachment exactly, but his main object was to get a machine which would accommodate itself to the irregularities of the ground, giving it a rocking motion, turning the bar up or down to suit the ground. It was not over ten days from the time we commenced the patterns before he had the machine in the field for trial first. I am inclined to think he tried it on Saturday, the same week, for the reason that I was not present at the trial. That was in Albert Bramer's field—at least, I understood it so. I was not there, but they told me so.

Q. 11. What did Frank Bramer say, if anything, about constructing a machine in such a manner that the finger bar would adapt itself automatically to the irregularities of the ground?

440 Counsel for complainants objects to the question as suggestive and because the statements of Mr. Bramer are irrelevant and immaterial.

Ans. Well, his exact statements and conversation I don't suppose I can give. I was in the field with him, and the great object seemed to be to so construct it that he could pass down into a dead furrow and out without catching the guards, and do the work in the furrow the same as anywhere else—down and up.

Q. 12. Did you ever see this machine tried?

Ans. I think I did.

Q. 13. When and where?

Ans. Well, I don't know as I can tell exactly; it was very soon after; he had to make some additions.

Q. 14. What additions were made?

Ans. I can't state in particular; some slight changes were made before the next trial.

Q. 15. Was there any changes made in the supports of the finger bar or the means by which it was attached to the main frame?

Ans. No, sir; not to my knowledge.

Q. 16. Where did you see this machine operated, and how did it operate?

Ans. In Mr. Corbin's field; I think it did very fair work, considering it was a new machine.

Q. 17. Look at the Bramer patent No. 51546, and particularly at the bars J and L, and state whether you understand the drawings of said patent and the functions of said bars J and L, and after examining the same state whether or not there was in the first
441 machine constructed by Bramer in 1862 corresponding devices substantially for the same purpose. And, if yea, how were such devices attached to the machine?

Ans. There were. I can't give a distinct description; it was over twenty years ago. There was no change in the general principle. I can't explain fully how the attachment was made, but it was attached so as to give a rocking motion to the finger bar. I think I understand the drawings.

Q. 18. In answer to question 10, in describing this 1862 machine, you say "the finger bar or cutting bar was attached by a cross-brace in front of—across the front of—the machine, under side, and the push bar attached with a snipe bill." Now, how was the cross-brace under the front of the machine attached to the machine?

Ans. By a snipe bill or its equivalent. I am sure of that. It was a wooden-frame machine, which made it necessary for such attachment.

Q. 19. What sort of a motion did these attachments of these bars give to the finger bar?

Ans. I don't know as I can express it any better than I told you. A rocking motion, also a motion the other way—that is, allowing the outer end to drop down and raise with the irregularities of the ground.

Q. 20. How many years' experience have you had as a skilled mechanic, and state what experience, if any, you have had in patents and patented devices?

Ans. About 35 years' experience as a skilled mechanic. In 1861, while working for Frank Bramer, I took out a patent in my own name for an improvement in armor plates for iron-clad ves-
442 sels. In 1886 I took out a patent in my own name on stilts for boys' use, and also in 1887, Feb. 1, a patent for carriage-top support.

Q. 21. Do you consider from your experience that you are competent to understand the drawings of patterns?

Ans. I am, generally speaking.

Q. 23. Who beside you was at work for Frank Bramer during the time of building this first machine?

Ans. Seth W. Fay and a man whose first name was George; I can't think of his other name.

Q. 24. Did George W. Way work for Frank Bramer during the time this first machine was constructed?

Ans. He did not. He had no steady blacksmith at that time. His brother Albert and his cousin Lewis both helped on this machine.

Q. 25. You have stated substantially that Bramer said that he was going to get up a mowing machine on the "tub-gear principle." You may state whether or not Bramer had been using what was called the planetary or tub gear in other machines manufactured by him. If so, state what they were.

Ans. He got up a horse-power for six or eight horses with what's called tub gear, as he called it—properly called planetary; also repaired horse-powers made upon the same principle.

Q. 26. And he said, did he not, that he was going to apply the tub-gearing principle to mowing machines?

Ans. He did, and proceeded to do so immediately the next day.

Q. 27. Do you know a man named Charles A. Downs?

443 Ans. I do. I know him well.

Q. 28. Did you ever know of his working for Frank Bramer; and, if so, when, and what work did he do?

Ans. He did work for Frank, in the winter season, at blacksmithing.

Q. 29. Where did Downs live at that time, and what other business did he have, if any?

Ans. He lived on the road leading to Pompey Hill from the lower end of the town, about one and one-half to two miles, on a farm.

Q. 30. How much work, if any, did he do while you were there?

Ans. I can't say in regard to that; the shops were in separate rooms.

Q. 31. Did he have any work or business in the room where the mower was made?

Ans. No, sir; I think not.

Q. 32. How much of the winter did he work there? State as near as you can.

Ans. I should judge, from my recollection, most of the winter.

Q. 33. You may state what other mowers or mowing machines, if any, were constructed by Frank Bramer when you were in his employ, and state what work you did on said machine, if any.

Ans. During the winter following, in 1862 and 1863, he got up patterns for an iron frame and all other necessary parts. I am not sure that he got up the wheels, but we got up all the small patterns. The frame was substantially like the one shown in the drawing of the Bramer, No. 51546, patent. On the frame of the first

444 iron-frame machine he had the name "Grasshopper." He

afterwards learned that there was another machine by that name, and changed the name to "Warrior."

Q. 34. When was this iron-frame machine you have just referred to fully completed and ready for use?

Ans. In the spring of 1863.

Q. 35. What work did you do on this second machine?

Ans. I worked upon the patterns from the commencement until the completion; also on the castings, fitting up the machine shafting, etc. I did most of the iron-work.

Q. 36. You may state how, in this second machine, the finger bar was attached to the main frame, and state how such attachment compared with or differed from the attachment of the wooden-frame machine constructed in the latter part of 1862.

Ans. The principle was not changed.

Q. 37. You have stated that the machine constructed in 1863 was substantially like the machine shown in the drawings of the Bramer patent; you may state what kind of gearing is shown in drawings of the Bramer patent.

Ans. Planetary or tub gearing.

Q. 38. And the first machine was also a tub gearing, was it not?

Ans. It was.

Q. 39. Where was this 1863 machine tried or exhibited, if you know?

Ans. It was tried in a field over towards Delphi—two or three miles from here. I think the field was owned by Mr. Wallace.

445 Q. 40. What, if anything, do you know about this 1863 machine being exhibited at fairs in 1863?

Ans. It was at Manlius.

Q. 41. How do you know this?

Ans. I was there at the time.

Q. 42. How did it operate at Manlius, if you saw it?

Ans. I don't think I saw it work; I had the care of the horse-powers and other machinery which took my attention.

Q. 43. What work, if any, did George W. Way do on this machine?

Ans. He did the blacksmithing and no other work, I think.

Q. 44. What was Way's business?

Ans. Blacksmith.

Q. 45. What proportion of constructing a mower is a blacksmith's work; what is it they do?

Ans. Well, the proportion perhaps $\frac{1}{3}$, making braces, hooks, pins, levers, etc.—a good many little things.

Q. 46. How many rooms were there in Frank Bramer's shop, and what were they used for?

Ans. Three—general work-room, engine-room, blacksmith shop.

Q. 47. Where were these mowers built—in which room?

Ans. In the general workshop mostly. I think when the first machine was built the blacksmith shop was in the general work-room. It was partially divided by a wooden partition on one

446 side and afterwards removed to the room in the rear which was built for a furnace-room to make room for other machinery.

Q. 48. In answer to question 39 you stated that this 1863 machine was tried in a field toward Delphi. State if you were present when this 1863 machine was then tried, and when was it.

Ans. I was present. It would be difficult to give the date, but it was in the second growth of clover, consequently after haying; it was in what they call seed clover.

Q. 49. How did this work or operate?

Ans. It worked quite satisfactorily.

Q. 50. Was this the first trial of the iron-frame machine that you attended?

Ans. I think it was, and the only one that fall.

Q. 51. Does this circumstance so recalled to your mind help to fix the date or probable date of the completion of this iron machine more definitely, on reflection?

Ans. It does, so far as the time of the year is concerned.

Q. 52. How do you know that this trial had on the farm near Delphi was had in the second or fall growth?

Ans. I know for the reason that I am well acquainted with crops and know from the looks of the crop.

Q. 53. I mean how do you remember that it was at this season of the year that you witnessed this trial?

Ans. I recollect the crop and the surroundings and the field as well as if it was yesterday. I could go right to the spot.

447 Q. 54. Judging from this circumstance, when should you say this second machine was completed?

Ans. Some time in September, early.

Q. 55. You have stated in answer to a former question that this machine was completed in the spring. What reason have you for correcting the date of the season?

Ans. None, except that I was present at this trial.

Q. 56. How does this change your opinion of the date of completion of this machine from the spring of 1863 to September, 1863?

Ans. I don't know that there is anything in particular. I have no record and no recollection of the particulars, but I do know that we made the patterns that winter.

Q. 57. State the winter.

Ans. In 1862 and 1863.

Q. 58. What else did Frank Bramer do after the completion of the 1863 machine in the manufacture of mowing machines, and who, if any one, was associated with him when you were there?

Ans. He went to work making arrangements for building machines, got a lot of castings together, and in January, 1864, he took in a partner, Mr. Harlow Phillips.

Q. 59. Did Messrs. Bramer & Phillips enter into the manufacture of mowing machines?

Ans. They did.

Q. 60. You may state whether or not the mowing machines manufactured by Bramer & Phillips were substantially like the machine shown in the Bramer patent.

448 Ans. They were in all their general principles.

Q. 61. And the finger bar in the 1864 machines attached

to the main frame in such a manner as to give a rolling or rocking motion to the finger bar and substantially like the manner in which the finger bar was attached in the 1862 and 1863 machines?

Ans. So far as I know, it was. I never saw the 1864 machine in the field, for the reason that my connection with them ceased in March of that year. One thing further: I worked on the bars most of the time for ten days—the bars of the 1864 machine—at Manlius, for Mr. King Preston, in July, 1864, commencing the 5th. I walked over there on the 4th and commenced on the 5th. That is the last of my knowledge of the machine so far as time is concerned.

Q. 62. Do you know where Mr. Bramer got his finger bars for his machines in 1862 or 1863?

Ans. I do not; I never went with him for anything.

Q. 63. Now, Mr. Stillman, you may state your reasons for fixing the dates of the construction of the wooden-frame machine in 1862 and the iron frame in 1863.

Ans. The first of April, 1861, I moved into a house occupied by Oliver Russel, nearly opposite the Methodist church down here, and I had a son born while living there, and I commenced work for Mr. Bramer that summer, and the next season we got up the first mowing machine, the wooden-frame machine, after haying, and I am positive that the winter following we got up the patterns for the iron frame.

Q. 64. Was the wooden frame painted and finished in the first machine?

449 Ans. I think not.

Q. 65. Do you know who was present at the trial of the second machine on the farm toward Delphi?

Ans. I think Mr. Seth W. Fay was present. There were other men living near there. I can't call their names, but think it was Wallace.

Q. 66. Do you recollect the last name of the mechanic you called George, who worked for Bramer in 1862?

Ans. George Bard.

Q. 67. Do you know where George Bard is now?

Ans. I do not.

Cross-examined by Mr. BANNING:

X Q. 1. Who assisted in building the first machine?

Ans. Seth W. Fay, George Bard, myself, and the blacksmith. I am not certain I can tell. There were two or three worked there—Chas. A. Downs, Lewis Bramer, Albert Bramer, Leroy Vincent, Frank Bramer. What I can't distinguish is which blacksmith worked on the mower. You see it has been over twenty years.

X Q. 2. This first machine is the one you call the wooden machine?

Ans. Yes, sir.

X Q. 3. And you name the fall of 1862 as the time when it was tried?

Ans. I do.

X Q. 4. Did this machine consist of anything more than the bars, frame-work, the gears, and the cutting apparatus?

Ans. Yes, very little; it had all the necessary connections.

450 X Q. 5. Was it not the roughest sort of a machine—just knocked together to try it?

Ans. It was made in a hurry, but not slighted.

X Q. 6. Didn't it break when it was tried?

Ans. I couldn't say.

X Q. 7. In whose field did they try it?

Ans. I was not present.

X Q. 8. Didn't they bring it back to the shop and take it out again a few days afterwards?

Ans. I think very likely they did.

X Q. 9. Did you attend any trial of that first or wooden machine?

Ans. I think I saw that work once.

X Q. 10. Are you positive that you did?

Ans. I don't know as I would say positive; I think I did.

X Q. 11. Where?

Ans. I think in Mr. Corbin's lot.

X Q. 12. Who was present?

Ans. I am not positive about that, who was present.

X Q. 13. Can you name any one that you are certain was present aside from Mr. Bramer?

Ans. I don't know as I could.

X Q. 14. Whose team was used in making the trial?

Ans. I couldn't say.

X Q. 15. How long was the machine tried?

Ans. I couldn't tell positive; but a short time at that time.

X Q. 16. When was it tried again?

Ans. I couldn't tell you.

451 X Q. 17. Will you swear positively that George W. Way was not present at the trial of the wooden machine in Corbin's lot?

Ans. No, sir; I don't know where he was; I couldn't say positive.

X Q. 18. You do not swear positively that he was not present on that occasion, do you?

Ans. I do not.

X Q. 19. What was done with the machine after that trial?

Ans. I don't think I could tell; my work was in the shop entirely.

X Q. 20. Did they bring it back to the shop immediately?

Ans. I think they did.

X Q. 21. Didn't Mr. Frank Bramer at once or within a few days break that machine to pieces?

Ans. I have no recollection of his breaking it at all.

X Q. 22. Well, then, didn't he take it to pieces within a few days?

Ans. I can't tell you whether he did or not.

X Q. 23. You were not in the army, I believe?

Ans. No, sir.

X Q. 24. Did you take any interest in the war, or read the papers about the different battles?

Ans. Yes, sir; I did.

X Q. 25. Think over in your mind some prominent battle that you remember was fought before this first wooden machine was built, and name it.

Ans. The battle of Bull Run.

452 X Q. 26. Name some other battle that you can recall that was fought before the first machine was built.

Ans. I can't think of any.

X Q. 27. How about the battles of Gettysburg and Vicksburg?

Ans. I remember about these battles, but can't give the dates.

X Q. 28. I don't ask you to give the dates when these battles were fought; I simply ask you whether they had been fought at the time this first machine was built. What is your recollection?

Ans. I couldn't tell you anything about it.

X Q. 29. When did you get acquainted with George W. Way?

Ans. In the summer of 1859.

X Q. 30. You knew of his being in the army, I suppose?

Ans. Yes, sir; I did.

X Q. 31. Was he in the army very long?

Ans. I think not very long. He went from Delphi. He was not living here when he went, and came back here after he got home.

X Q. 32. What year was he in the army?

Ans. I couldn't say positively.

X Q. 33. Was it before or after he was in the army that this first machine was built and tried?

Ans. It was during his absence from here, and I think he must have been in the army.

X Q. 34. Will you swear positively that he was in the army at the time this first machine was built?

Ans. No, sir.

453 X Q. 35. Will you swear positively that he was not here in Fabius at that time?

Ans. I am quite sure he was not.

There is no question numbered 36.

C. H. WHEATON, *N. P.*

X Q. 37. Will you swear that he was not?

Ans. Not any more directly than I have.

X Q. 38. Then you decline to swear positively that he was either absent from or present in Fabius at the time the first machine was built?

Ans. I said I was quite positive he was absent, and I still think so.

X Q. 39. Will you swear positively that he was absent from Fabius at the time the first machine was built?

Ans. No, sir; not more direct than I have.

X Q. 40. Then you think he was absent; is that correct?

Ans. Yes, sir.

X Q. 41. But you don't swear positively that he was absent?

Ans. No, sir.

X Q. 42. Who built the frame-work for the first machine?

Ans. Mr. Fay, I think, and myself.

X Q. 43. Have you any writings or memoranda to refresh your memory about these transactions?

Ans. Not particularly relating to this mowing-machine business.

X Q. 44. Have you any of any kind that enables you to positively fix dates when you were at work on the first and second machines?

454 Ans. I have a paper, that is not here, that I have some accounts on at the close of my work for Mr. Bramer. I don't know that I have any book with dates; haven't seen it lately, if I have.

X Q. 45. When did you last see this account that showed when you quit work for Bramer in 1864?

Ans. Within the past year.

X Q. 46. Who have you talked with about the subject-matter of your testimony to-day?

Ans. Not any one, in particular. The question has been just spoken of.

X Q. 47. Where do you live?

Ans. At Hornellsville, Steuben Co., N. Y.

X Q. 48. How far is that from here?

Ans. I think in the neighborhood of one hundred and fifty miles; not far from that.

X Q. 49. Who asked you to come here and testify?

Ans. I received a telegram on Friday last, about 7 o'clock p. m., signed K. H. C. Preston, of Syracuse, asking if I would come.

X Q. 50. Who is Preston?

Ans. He is a machinist and pattern-maker.

X Q. 51. When did you come to Syracuse?

Ans. I arrived there Sunday morning, about two o'clock.

X Q. 52. When did you meet Mr. Talcott?

Ans. On Sunday morning, at Syracuse.

X Q. 53. Didn't you tell him what you would testify to before he brought you down?

Ans. I told him some of the facts I knew about the machine.

455 X Q. 54. Did not you come down from Syracuse in the same car with me this morning, with Mr. Talcott sitting besides you, and did you not come in the same hack with me across the country, Mr. Talcott still sitting beside you, without my being introduced to you?

Ans. I did.

X Q. 55. And did you not remain with Mr. Talcott after we got here without my being introduced to you until you were sworn as a witness?

Ans. I did not remain with him until I was sworn. I guess I was introduced to you just before I was sworn.

X Q. 56. Will you swear positively that the finger bar of that first wooden machine was attached to the frame just as you have described it?

Ans. I am quite sure it was.

X Q. 57. According to your own account it has been nearly twenty-five years since that machine or frame-work was made; in view of

this lapse of time do you want to be absolute and unqualified in saying it was just the way you have described, or do you not rather wish to be understood as swearing it was so according to your best recollection after this great lapse of time.

Ans. That latter part would be true; it was so according to my best recollection and belief, for the reasons that I know what his object was to accomplish, and I was what, perhaps, you lawyers would call his right-hand man in his mechanical work in the shop. He came to me very often with suggestions. We often worked until 9, 10, 11, and sometimes 12 o'clock at night.

456 X Q. 58. And you think an attachment of the finger bar to the frame in the way you have described would accomplish the object which you say Bramer had in view.

Ans. I know it did do it.

X Q. 59. To refresh your memory I will ask you if the wheels of that first machine were not taken from Orsemus Hills' machine. I mean the one he used during his haying.

Ans. I don't know whose machine; they were taken from some machine.

X Q. 60. Where did you work in the year 1867?

Ans. In the town of Wirt, Allegany Co., N. Y.

X Q. 61. In the years 1865 and 1866?

Ans. In that same town.

X Q. 62. What were you doing?

Ans. I was working at cabinet-work, my original trade, most of the time. I went directly there from here in 1864.

X Q. 63. Did you ever work on mowing machines, except during the time you were at Bramer's?

Ans. I worked in a mowing-machine factory 8 years, besides at Bramer's, beginning about 1876. I worked for Rawson & Thacher, at Hornellsville, N. Y., but most of my work was on reapers. I also worked at sowing machines nearly two years previous to coming to Fabius.

Redirect examination by Mr. TALCOTT:

R. D. Q. 1. What was the object sought to be accomplished by Frank Bramer when he made his new mowing machine? What did he say about it?

457 Ans. His first object was to make an easy-running machine by applying the power to both sides of the shaft, thereby overcoming the friction. His next object was in connecting the finger bar to adapt it to the inequalities of the ground. I recollect that distinctly, as he went through motions with his hands. I also recollect that the iron-frame machine did accomplish that object at the time I saw it work over towards Delphi.

R. D. Q. 2. And is it true, as you have testified, that the finger bar was connected by substantially the same means in the machine of 1862 as in the iron-frame machine of 1863?

Ans. I think it is to all intents and purposes.

R. D. Q. 3. I will ask you again whether or not George W. Way

was at work in the shop of Frank Bramer at Fabius when his first wooden-frame mowing machine was made?

Ans. I don't think George W. Way had a single thing to do with that machine. He was not at work there.

ORSEMUS G. STILLMAN.

LEWIS BRAMER, a witness produced, sworn, and examined on the part of the defendants, deposes and testifies as follows in answer to questions by Mr. TALCOTT:

Q. 1. State your name, age, residence, and occupation.

Ans. Lewis Bramer; age, 46; residence, Fabius, N. Y.; occupation, hardware merchant.

Q. 2. How long have you resided in Fabius?

458 Ans. I was born in Fabius and have lived here all my life except while absent in the army a part of 1861 and 1862, four years that I was in Little Falls, N. Y., and four years in Prescott, Canada. The rest of my life has been spent here.

Q. 3. Did you know Frank Bramer his lifetime?

Ans. I did.

Q. 4. How was he related to you?

Ans. He was an own cousin of mine.

Q. 5. You may state about the time of the year you entered the army and when you came out of it.

Ans. I believe my enlistment dated Dec. 1, 1861, and my discharge is dated July 19, 1862.

Q. 6. Where did you go immediately after your discharge?

Ans. I came to Fabius, my home.

Q. 7. What was your trade? What trade had you taken up at that time?

Ans. Previous to my going into the army I was a blacksmith.

Q. 8. What was the first work you did after you came back from the army that you recollect of or of which you have any memorandum?

Ans. I worked ½ day for Frank Bramer, the first work I done.

Q. 9. What work did you do for Frank Bramer and when was it?

Ans. I forged two wrists for a mowing machine some time in the last of August. It was the 18th day of August, 1862.

Q. 10. How do you know that you forged these wrists for

459 a mowing machine on the 18th day of August, 1862, for Frank Bramer?

Ans. The date is fixed by a reference to a diary I kept at that time.

Q. 11. Have you kept possession of this diary, and can you and will you produce it?

Ans. I have kept it and can produce it.

Q. 12. What is this diary of?

Ans. It is a diary I kept while in the army. It does not cover the whole year of 1862. There are entries in it until November 22, 1862.

Q. 13. Will you read to the notary, so that he may take it down,

the entry showing that you did this work for Frank Bramer, giving the page of the diary, the date, month, and year it covers?

Ans. The diary is not paged. "Monday, August 18, 1862, worked for Frank Bramer until noon and came home; went over to the railroad with the band to meet the speaker this afternoon and to the meeting in the evening. I played with the boys."

Q. 14. How do you know from this diary that you did this work you have testified to?

Ans. After my return home up to this time my health had not been good and I had not worked any. Frank came down to my father's where I was and said he wanted I should go up and do a little forging for him. He had no blacksmith. I told him I didn't feel able to work. He said he had a little work to do that he was anxious about, and that he would help me do it, and from these circumstances I remember the kind of work I done, being my first work. I remember forging these wrists out of 1½-inch-square
460 iron. He turned them up in the lathe while I was there and cut the threads on them for the nuts.

Q. 15. What were these wrists for, and what use was made of them?

Ans. One wrist in each end of the arm on which the travelers revolve on the inside of the tub or internal gear.

Q. 16. Did you make this entry in your diary which you have read at the time or immediately after the event?

Ans. I usually made it on the evening of the day when the event occurred.

Q. 17. Where has this diary been kept since?

Ans. It has been in my possession.

Q. 18. Will you produce this diary, so that the counsel for the complainants can examine it?

Ans. I will (producing the diary and handing it to Mr. Banning).

Counsel for the defendants states that is the witness' private diary and will not be put in evidence, but complainant's counsel has the full liberty to examine it all that he desires and to cross-examine him with reference to it, and that it will be produced on the final hearing of this case, if the court so directs; and, for further identification, it is marked by the notary, on the page from which the entry is read, Defendants' Exhibit Witness' Diary, Chas. H. Wheaton, notary public.

461 Adjourned by consent of the parties until June 7, at 9 o'clock a. m.

JUNE 7, 1887.

Met pursuant to adjournment.
Present: As before.

Examination of LEWIS BRAMER resumed:

Q. 19. Look at the drawings of the "Defendants' Exhibit Bramer 1865 Patent" and designate by letters on said drawings, if you

can, the wrists corresponding to the wrists you forged for Frank Bramer on August 18, 1862.

Ans. I think letter "B" in this drawing represents the arm and "C" represents the travelers which revolve on the wrists which I forged. The position of the wrists are indicated by a circular line near each end of the arm which is marked "B." These travelers mesh into the tub or internal gear which gives them their motion.

Q. 20. Did you afterwards see in other machines manufactured by Frank Bramer and the Warrior Mower Co. wrists substantially like those made by you as you described?

Ans. The arm afterwards made by the Warrior Mower Company had the wrists cast solid, but the functions were the same. In my work on repairs on mowers the first of his, Frank Bramer's, make I have found the wrought-iron wrists same as forged by me.

Q. 21. Where did you next go to work after you did this work for Frank Bramer?

Ans. I soon went to work for Ansel Ellis, carriage ironing, here in Fabius village.

462 Q. 22. How long did you remain with Mr. Ellis?

Ans. I think I remained with him until the fall of 1864.

Q. 23. How far was Ellis' shop from Frank Bramer's?

Ans. I should judge about one-half mile.

Q. 24. Had you any business or work to do in Frank Bramer's shop during the time you were at Ellis' shop to work?

Ans. I don't remember of working for Frank during the time I worked for Ellis. I think there is entry in my diary of my working for Frank a few days after Aug. 18.

Q. 25. During the time you were at work at Ellis' did you know of or hear any rumors of Frank Bramer's entering on the manufacturing of mowing machines? If you did, state when it was as near as you can and what was said about it in substance.

Ans. I did. It was talked by the community and people generally that he, Frank Bramer, was going to use himself up financially. This was talked in the fall and winter and spring of 1862 and 1863.

Q. 26. Now you may state when, if ever, you saw one of Frank Bramer's machines operated or exhibited.

Ans. I saw one at the Manlius and Pompey town fair, held at Manlius in the fall of 1863.

Q. 27. You may describe this machine, stating of what material it was made, how complete it was, who exhibited it, and how you came to see it, and tell the kind of machine.

463 Ans. It was an iron-frame machine; the gearing was what is known as planetary. It was a finished machine—painted and finished in every particular. The team that was hitched to it was driven by Albert Bramer. I was visiting the fair and saw it the same as I saw any exhibit. It being a new thing and being gotten up near home, it attracted a large crowd.

Q. 28. In that machine how was the finger bar attached to the main frame of the machine?

Ans. The inner end of the finger bar was fastened between what

was known as the inner shoe and inner shoe cap by two bolts. Hinged to this inner shoe cap was what was known as a main brace running along and under the front of the main frame, attached to the under side of the left-hand front of frame by a snipe bill, allowing the finger bar to raise and fall and also to roll or rock.

Q. 29. Was there also in this 1863 machine a push bar; if so, how was it attached?

Ans. There was; yes, sir. There was a loop riveted to the main brace, just inside the right-hand drive wheel, to which this push bar was attached. This push bar run back to the rear end of the frame on the under side. I think that at that time was attached to the frame by a snipe bill, but I am not positive as to that. Afterwards it was held by the same bolt that went through the rear end of the pole for a draw bolt.

Q. 30. State, if you remember, whether these devices were so attached to the finger bar or whether there were other devices which would prevent the finger bar or the guards attached to it from running into the ground.

464 Ans. This rear or push bar was so attached to the main brace as to prevent the points of the guards from running into the ground; afterwards, in place of the loop, there was a cast-iron main-brace block used.

Q. 31. Please look at the Bramer 1865 patent, especially the drawings, and state whether in its general features it is like or substantially like the Bramer machine exhibited at the Manlius and Pompey fair in 1863.

Ans. It is the same, substantially.

Q. 32. How do you know that you saw this machine in 1863 at the Manlius and Pompey fair? What fixes the date?

Ans. It was while I worked for Mr. Ellis. It could not have been in 1862, and in 1864 I was not at the Manlius fair, as I know. I was not there but one year, and it was the only time I ever attended the fair until after 1870.

Q. 33. How did this machine operate at the fair, if you remember?

Ans. It run very nicely, considering it was an early production. There was not much grass there; no heavy grass.

Q. 34. Did you see it cutting grass?

Ans. I saw it cutting such grass as there was.

Q. 35. Did you see this machine in operation anywhere else that season; if so, where was it?

Ans. I did; on Parker Andrews' farm. My impression is that it was a few days before the fair.

Q. 36. State all you remember about this trial at Parker Andrews', who operated the machine, how it worked, and who was present.

465 Ans. Frank Bramer was there. I think Albert Bramer drove the team. There were quite a number there. I can't tell their names. Parker Andrews was there. It worked satisfactorily.

Q. 37. What, if anything, did you afterwards have to do with the

manufacture of mowers in connection with Frank Bramer and others? And state whether such mowers were substantially like the 1863 mower you have described.

Ans. I worked for Frank Bramer during the winter of 1864 and 1865, until March, 1865, on mowers, forging. Again I commenced work for him some time in 1867, and all the time for ten years afterwards I was engaged in the manufacture of Warrior mowers here at Little Falls and at Prescott, Canada. These mowers were substantially like the 1863 mower. The operation was the same, but the attachments were different.

Q. 37. State what position you held during these years in the manufacture of mowers.

Ans. Nearly all of the time at Little Falls I had charge of the forging department. I was there about four years. While in Canada, four years, I had full charge of the entire works in the manufacture of mowers.

Q. 38. State whether or not the manufacture of these Bramer machines was extensively carried on at Little Falls and by you in Canada.

Ans. It was.

Q. 39. From your experience in the manufacture of mowing machines should you say that it was at all probable that a man without any facilities for casting or making other machinery for mowing machines and without any experience whatever in the
466 manufacture of mowing machines and with limited resources could originate, make the patterns, get the castings for, an entire new mowing machine with new and novel devices in it, and get the machine together, complete and finished, so that it worked successfully in the new inventions adapted to it—could a man do this from the close of the haying season and so that it would be ready for use and successfully cut fall feed in the latter part of September of the same year, said machine being completely finished and so successful as to attract great attention from those who saw it?

Objected to by complainants' counsel as being irrelevant, incompetent, immaterial, and leading.

Ans. I should say not.

Q. 40. What means did Frank Bramer have—I mean tools, casting, and financial means—for the construction of mowing machines in 1863?

Ans. He had no special tools for the manufacture of mowing machines. His casting was done at Manlius, twelve miles away. His means were rather limited, financially.

Q. 41. What time in the fall was the fair that you attended held at Manlius?

Ans. I have no dates; the fair was usually held in September.

Cross-examined by Mr. BANNING:

X Q. 1. Was not Frank Bramer, during the year 1862, doing con-

siderable work in the repair of threshing machines and other farm machinery?

467 Ans. He was manufacturing and repairing.

X Q. 2. What was he manufacturing?

Ans. Horse-powers, threshers, sawing machines, and clover-hullers. This was his line of work.

X Q. 3. In his horse-powers, used in connection with his threshers and other machines, did he not use tub or planetary gears?

Ans. He did in the sweep power.

X Q. 4. Were not those planetary gears substantially like the same as those which he used afterwards in his mowing machines, as shown in his patent before you?

Ans. They were the same in principle, but three or four times as large. They had two sets of travelers, while the machine shown in the Bramer patent has one set.

X Q. 5. Those machines—I believe you called them "sweep powers"—employed, in connection with their planetary gears, wrists, did they not?

Ans. Yes, sir.

X Q. 6. In your diary, under date of August 6th, I find a statement to the effect that you "went up to the shop and made a mowing-machine knife for Sumner Benson's machine." What shop was that?

Ans. I should say it was Frank's shop. I have no recollection of the circumstance.

X Q. 7. While you were describing the machine that was exhibited, as you say, at the Pompey and Manlius fair did you not have the Bramer of December 19, 1865, open before you?

Ans. I did.

468 X Q. 8. Look at the push bar "L" and state whether it is not attached to block "*l*" by the pin which attaches the chain by which the cutting devices are raised or lowered to the same block?

Ans. It is.

X Q. 9. In this machine that you saw at the fair this block "*l*," with the chain and push bar "L" attached to it, as shown in the Bramer patent before you, were not used. Is this correct?

Ans. The chain and push bar were used, but the block was not.

X Q. 10. You saw no machine tried by Frank Bramer in 1862, did you?

Ans. Not that I remember of.

X Q. 11. How large a place is Fabius village?

Ans. About 400 inhabitants.

X Q. 12. How many Bramers live at Fabius and neighborhood at present?

Ans. Two—heads of families. I have two children and my brother has three.

X Q. 13. There was formerly quite a number of you, were there not?

Ans. There was my father and his family, his brother and his family.

X Q. 14. During the last few years this matter about when Frank Bramer made his first mowing machine has been considerably talked about in the neighborhood, has it not?

Ans. A couple of years ago it was agitated for a little time. I have heard nothing of it and thought nothing of — until quite recently.

469 X Q. 15. Some took one position as to the year and some another, didn't they?

Ans. I understand so.

X Q. 16. Well, hasn't it been a matter of some dispute between those who claimed to know?

Objected to by counsel for defendants as immaterial, the question what people who had no means of knowledge or no interest in the matter may have thought as to the time being immaterial.

Ans. I haven't heard any dispute.

X Q. 17. They have differed, however, as to the year, have they not?

Ans. I have understood so.

X Q. 18. How many times was Frank Bramer here looking the matter up some six or eight years ago?

Ans. I don't know that he was here at all six or eight years ago looking up the matter.

X Q. 19. Don't you know that Mr. Bramer came here on at least two occasions, if not more, and made inquiries to ascertain what he could prove about when he made his first machine?

Ans. I know of his being here once, positively.

X Q. 20. Don't you know through what you heard at the time that he was here on one or two other occasions making inquiries?

Ans. He was here once after that with his wife. I don't know of his making inquiries at that time, but the first time he came on that business.

470 Redirect examination by Mr. TALCOTT:

R. D. Q. 1. Referring again to those wrists for mower that you say you made, did you know at that time of there being any mowing machines in existence that were constructed upon a plan or were geared with such devices as the wrists that you manufactured at that time?

Ans. I did not.

R. D. Q. 2. Did you know or hear of any mowing machine constructed before or at that time with a planetary gear?

Ans. I did not.

R. D. Q. 3. Whose mower was it that had the first planetary gear that you first heard of?

Ans. Frank Bramer's.

R. D. Q. 4. Are you positive that those wrists that you made were not used in the repairing of some neighbor's mowing machine?

Ans. I don't think they were.

R. D. Q. 5. State your reasons.

Ans. I don't think there was any mowing machine in use at that time with a planetary gear.

LEWIS BRAMER.

JOHN J. HOWE, a witness produced, sworn, and examined on the part of the defendants, deposes and testifies as follows in answer to questions by Mr. TALCOTT:

Q. 1. State your name, age, residence, and occupation.

471 Ans. John J. Howe; residence, in Pompey; occupation, a farmer; age, 39.

Q. 2. How long have you lived in the town of Pompey?

Ans. The last time six years in March. I was born in the adjoining town of Fabius.

Q. 3. Where were you living from 1860 to 1864?

Ans. I was living in the town of Fabius.

Q. 4. Were you living with your father?

Ans. Yes, sir.

Q. 5. State your father's name, his residence, and his business, and, if a farmer, where his farm was situated.

Ans. His name was Joel Howe; was a farmer; farm was situated in the town of Fabius, on the road from here to Delphi; not the direct road, but just as near.

Q. 6. How was it situated in reference to a farm called the Wallace farm?

Ans. There were three Wallace farms in the neighborhood. We joined on the west with one, one Wallace farm. This was the only one with which our land joined.

Q. 8. You have stated that you were living at home from 1860 to 1864. You may state of what other members besides yourself your father's family consisted in the year 1863. I refer to those who were living at home at that time.

Ans. My father and mother, three sisters, and one brother, J. Wilson Howe. My father is not living now.

Q. 9. You may state whether or not you recollect of there being a trial of a mowing machine built by Frank Bramer on your father's farm when you were living at home. If you do, state when

472 it was, who was present, in what field, in what grass it was tried, and all about it.

Ans. I do. We were mowing clover seed by hand. It was lodged quite flat to the northwest. Mr. Bramer came along with his machine, put it into the lot and mowed clover with it. Well, he thought he could mow it and we thought he couldn't. He put it into the lot and mowed the same way the grass was lodged—that is, he started that way, and it cut it satisfactorily. This was in October, 1863, in a field of clover just west of the house, north of the highway. Mr. Frank Bramer, my brother, and myself, that I remember distinctly.

Q. 10. How are you enabled to fix distinctly the date of this work in October, 1863?

Ans. During the time we commenced to cut it and before we got

it into the barn my grandmother died, who was living with us at the time, and she died the 21st of October, 1863.

Q. 11. How do you fix the date of her death?

Ans. From the family record.

Q. 12. How lately have you examined that record?

Ans. Last Saturday evening.

Q. 13. Where has that record been kept?

Ans. It has been kept in the same house where my father died. My brother lives there.

Q. 14. What kind of a machine was it Mr. Bramer had at your father's farm, if you remember, or what did Mr. Bramer say about it, if you cannot describe it?

Ans. It was a machine of his make. I don't know but it would be a hard matter to tell all he said about it. It was an iron-frame machine.

473 Q. 15. Do you recollect how the finger bar was attached to the main frame of the machine?

Ans. I do not.

Q. 16. Do you recollect what, if anything, Mr. Bramer said about his machine being adapted to rough surface of ground at that time?

Objected to by complainants' counsel as being suggestive, incompetent, and leading.

Ans. Well, he had considerable to say about its being adapted to rough or stony ground on account of the construction of the cutter bar.

Q. 17. What sort of ground was it that it was operated on?

Ans. On a meadow. This was the first season it had been in meadow, the small stones had not been picked up; it was not particularly rough, more than an ordinary meadow.

Q. 18. What did you say as to whether it operated satisfactorily or not?

Ans. It did.

Q. 19. What, if anything, was said by you or your brother after it was done about the work?

Ans. I don't remember any particular conversation, but we were surprised to see a machine do as well as the work was done here.

Q. 20. Now, Mr. Howe, you may state whether prior to the time you saw this iron-frame machine operating on your father's farm you had seen another machine constructed by Frank Bramer. If you did state when and where it was.

474 Ans. I did. I couldn't state when, but it was prior to that time. It was here at Mr. Bramer's shop in Fabius. It was the first machine that he made, put into a wooden frame just to try.

Q. 21. In what state of completion was it when you saw it?

Ans. It was ready to hitch onto, except boring the hole in the tongue for the whiffletrees.

Q. 22. What did you see done with this machine?

Ans. I saw them mow weeds with it on the roadside.

Q. 23. Give the kind of weeds.

Ans. It was May weeds.

Q. 24. In your judgment and recollection how long prior to this trial on your father's farm was it that you saw this wooden-frame machine operate?

Ans. My judgment would be that it was the summer before.

Q. 25. You mean by that the year before.

Ans. I do.

Cross-examined by Mr. BANNING:

X Q. 1. What makes you think it was the year before? Do you have any memorandum or writing of any kind to assist your recollection?

Ans. No writing, no memorandum, but my judgment was that they would need more time from the time that I saw this wood frame in operation to make patterns and have their castings completed in October.

X Q. 2. Did you ever have any experience in making castings or patterns for mowing machines?

475 Ans. No, sir.

X Q. 3. You do not know, then, in what time these things can be done?

Ans. I do not.

X Q. 4. Who all was working at Mr. Bramer's shop at the time you saw this wooden machine?

Ans. I couldn't tell.

X Q. 5. Were you acquainted with any of the men that was working there?

Ans. I couldn't tell.

X Q. 6. That was nearly twenty-four years ago that the machine was operated on your father's farm; you were then about fifteen years old, as I understand it?

Ans. Yes, sir.

X Q. 7. Can you swear positively that it was not an earlier period this same summer of 1863 you saw this wooden-frame machine?

Ans. I could not.

X Q. 8. Was it before or after your grandmother's death that this machine was used on your father's farm?

Ans. Before.

X Q. 9. How much before?

Ans. A few days.

X Q. 10. Then it would be about as near to it as we could get it if we should say it was about the middle of October that this machine was used, would it?

Ans. I should think so.

X Q. 11. Do you think it was earlier than the 15th of October, 1863, that Frank Bramer tried his iron machine on your father's clover?

Ans. I should not.

476 X Q. 12. How long did he run it at your father's place?

Ans. It is my impression that it was the latter part of the day, and he didn't run it but a little while, perhaps an hour and perhaps longer.

X Q. 13. Would you say from your present recollection that he ran it in actual work as much as an hour?

Ans. I couldn't.

X Q. 14. Was your brother, who was present, younger or older than yourself?

Ans. Older.

X Q. 15. Had you ever operated a mowing machine before this occasion?

Ans. No, sir.

X Q. 16. Do you remember how the wooden-frame machine was constructed as to any of its details?

Ans. I think it was made of 4 x 4 stuff, unpainted. I should think it was about 2 x 3 feet in the clear.

X Q. 17. Were horses hitched to it or was it pulled by hand at the time you saw it cut some weeds at Frank Bramer's shop?

Ans. It was drawn by a pair of horses.

X Q. 18. Do you remember who drove them?

Ans. I do not.

X Q. 19. Was your grandmother buried in the cemetery at this place?

Ans. No, sir.

X Q. 20. What kind of a record is this family record that you have mentioned?

Ans. It is a record of births, marriages, and deaths.

X Q. 21. Who made the entry in it that you have used to
477 refresh your memory as to the date of your grandmother's death?

Ans. It is a record that my mother had, but I couldn't tell who made the entries.

X Q. 22. Do you know when the entry was made?

Ans. I do not.

X Q. 23. Do you know positively that the entry correctly gives the date of your grandmother's death?

Ans. Not from my personal knowledge. I have no reason to doubt the record.

Redirect examination by Mr. TALCOTT:

R. D. Q. 1. Were these May weeds in blossom at the time of the trial of this wooden-frame machine?

Ans. They were going out of blossom; past their prime.

R. D. Q. 2. What part of the summer or season do these May weeds usually go out of blossom?

Ans. I think you will find them in blossom quite late in the season, but his patch has passed their prime.

Recross-examination by Mr. BANNING:

R. X Q. 1. This is the 7th of June. Have the May weeds begun to come into blossom yet?

Ans. I haven't seen any.

R. X Q. 2. Aren't they in bloom after the first of August?

Ans. I think they are sometimes.

JOHN J. HOWE.

478 STAFFORD ALLEN, a witness produced, sworn, and examined on the part of the defendants, deposes and testifies as follows in answer to questions by Mr. TALCOTT:

Q. 1. State what is your name, age, residence, and occupation.

Ans. Stafford Allen; 76 years of age the 21st day of last April; Fabius, Onondaga county; occupation, shoemaker.

Q. 2. Did you ever work for Frank Bramer or Bramer & Phillips?

Ans. I did.

Q. 3. When did you commence, and how long did you work?

Ans. I think I commenced about March 1, 1864, and worked about six months.

Q. 4. What work did you do?

Ans. Mostly drilling.

Q. 5. Do you know generally what kind of a mowing machine was made, and what they called it?

Ans. The "Young Warrior."

Q. 6. Prior to 1864 where did you live?

Ans. In 1863 I was in Truxton, Cortland county, New York.

Q. 7. How far from Fabius is Truxton?

Ans. They call it about eleven or twelve miles.

Q. 8. Do you recollect whether or not there was a Bramer machine exhibited at Truxton when you were there the year before you worked for Bramer and in 1863?

479 Ans. Yes; I remember its being there.

Q. 9. Who exhibited this machine?

Ans. I won't be positive who done it—whether it was Albert Bramer or Frank Bramer; I think it was one or the other of them.

Q. 10. On what place was this machine exhibited?

Ans. On Dr. Miller's flats.

Q. 11. Do you know anything of the mechanical construction of mowing machines?

Ans. Well, no, I don't; I couldn't get one up.

Q. 12. What drilling did you do at Bramer and Phillips'?

Ans. They had a great big iron tub attached to the frame, and I had to do that drilling and general drilling.

Q. 13. Do you know how long Bramer and Phillips were in company?

Ans. I do not.

Q. 14. Do you know they were in company when you went to work for them; was Mr. Phillips there?

Ans. Yes; he was there; I think they were in company; their names were stamped on the machines.

Q. 15. You may state, if you recollect, whether the machine you saw in 1863 on the Miller place was the same style of machine, as far as you could judge, as the machines made by Bramer and Phillips in 1864.

Ans. I think they resembled one another very much.

Q. 16. How many years were you acquainted with Frank Bramer?

Ans. I can't answer your question.

Q. 17. About how many years?
480 Ans. About fifteen or twenty years.

SPAFFORD ALLEN.

Adjournment, by consent of the parties, until June 8, at 8.30 o'clock a. m.

JUNE 8TH, 1887.

Met pursuant to adjournment.
Present: As before.

BENJAMIN W. BRAMER, a witness produced, sworn, and examined on the part of the defendants, deposes and testifies as follows in answer to questions by Mr. TALCOTT:

Q. 1. State your name, age, residence, and occupation.

Ans. Benjamin W. Bramer; 43 years this coming August; residence, Fabius, Onondaga county, N. Y.; occupation, carriage-maker.

Q. 2. Have you visited the village cemetery this morning; and, if so, for what purpose? And state what you found there with reference to the death of Albert Bramer's wife.

Ans. I have. I visited it for the purpose of ascertaining the date of Mrs. Albert Bramer's death, and find that Julia E. Mattocks, wife of Albert Bramer, died January 12, 1863. So inscribed upon her headstone.

Q. 3. How are you related to Frank Bramer?

Ans. Own cousin.

Q. 4. Now, Mr. Bramer, you may state what you know about the construction of a mowing machine or mowing machines by
481 Frank Bramer, at Fabius; state when the first one was constructed that you know anything about, and give the reasons for your fixing the date of such constructions, and state fully in regard to the same.

Ans. In the season of 1862, in September or October—I couldn't place the exact date, but it was in the fall of the year—I saw a machine operated or tried, made by Frank Bramer, or at his shop—I suppose by him—in the rear of Mr. Corbin's garden, in a lot back there, in some rowen, that was. The frame of that machine was constructed of wood and the gearing was what he termed the tub gearing, or should be rightfully called the planetary gear.

Q. 5. How was the finger bar in that machine you saw operated attached to the frame of the machine, if you know?

Ans. I wouldn't want to put that positive, exactly. My best recollection and belief is that it was attached to the main frame by means of a snipe bill welded or hooked into the main brace, snipe bill passing up through the frame.

Q. 6. What would be the effect of such an attachment on the finger bar when in operation on the surface of uneven ground; what motion would it give it, if any?

Ans. It would make the finger bar flexible, giving it a rolling motion—allowing it to cut in and out of uneven surfaces, dead furrows, etc.

the machine was concerned; so much so that it was taken to trials afterwards, and was also exhibited at fairs or at a fair.

Q. 23. How often were you in the shop with Frank Bramer when this machine was being built?

Ans. Quite often. I used to run up there at night after I got through at the shop to see how the machine got along.

Q. 24. Do you know anything about the forming of a partnership between Frank Bramer and Harlow C. Phillips, or if such a partnership was formed?

486 Ans. There was.

Q. 25. When?

Ans. About January 1, 1864.

Q. 26. When you returned from the army in 1865 was Mr. Phillips still in company with Frank Bramer?

Ans. He was not.

Q. 27. When, if you know, did Frank Bramer build a shop to enter upon the business of making his own castings?

Ans. I couldn't tell. When I returned from the army he was making his own castings.

Q. 28. Prior to that time where did he get his castings made, if you know?

Ans. Mostly, I think, at Manlius, New York.

Cross-examination by Mr. BANNING:

X Q. 1. You have spoken about the wooden machine made by Frank Bramer as his first machine. Did he make more than one wooden-frame machine?

Ans. Not to my knowledge.

X Q. 2. Did you ever hear of his making more than one?

Ans. I never did.

X Q. 3. How many iron-frame machines did he make during the year 1863?

Ans. Not but one, to my knowledge.

X Q. 4. Look at the drawings of this Bramer patent of December 19, 1865, and particularly at the block "*l*" to which the front

487 part of the bar "L" is pivoted. Did the wooden-frame machine or the 1863 iron-frame machine contain that block "*l*"?

Ans. I don't think it did.

X Q. 5. Did those machines have the tongue "D" passing loosely through a stirrup or box "*g*" on the under front side of the frame, as in figure 2 of the Bramer drawings?

Ans. It did in the iron frame of 1863.

BENJ. W. BRAMER.

By consent of counsel, adjourned to meet at the Vanderpool Hotel, in Manlius, N. Y., June 9, 1887, at 8.30 o'clock a. m.

JUNE 9, 1887.

Met at the Vanderpool House pursuant to adjournment.

Present: As before.

ALVAH WOODWORTH, being a witness produced by the defendants, and being duly sworn, testified as follows:

It is stipulated by counsel (in order to save time) that the witness on his direct examination will testify and did testify as follows: That he is 78 years of age, and resides in Manlius, N. Y., and has resided there since 1837; that his business was that of a furnaceman and moulder; that he owned an iron foundry, in which he did custom work; that from 1858 to 1869 he was in partner-
488 ship with one Henry Whitney at said Manlius, N. Y.; that the witness has in his possession and has had since the date of the entries therein the account books of Woodworth and Whitney; that said account books contain accounts with Frank Bramer and Bramer and Phillips, said account with Frank Bramer running from 1860 to January 20, 1864, when it was afterwards kept in the name of Bramer and Phillips for most of that year; that said accounts, from their commencement to the close of the same, contain several hundred entries, few of which are specific as to the article, but state generally that they are for castings; said entries were made at the time or immediately after said work was done; said books also contain an account with George Eaton, covering April and May, 1863, and also showing that said Eaton worked for said Woodworth and Whitney seventeen days in July and August, 1864; that the said Woodworth, on his direct examination, will testify that the said Eaton worked for the said firm of Woodworth and Whitney from 1860 to 1861, when he left, and returned to their employ in 1863, and worked there two months in April and May; that said Eaton was a moulder by profession; that during April or May, 1863, the said Eaton cast at the witness's shop two drive wheels a day for mowing machines for Frank Bramer, with some other castings which the
489 witness does not recollect; that the witness on his direct examination also will testify that he knows that a great part of the castings furnished by the firm of Woodworth & Whitney for the firm of Bramer & Phillips in the year 1864 were for mowing machines; that the year before said Bramer & Phillips entered into partnership for the manufacture of mowing machines the said Bramer made and exhibited a successful mowing machine at the Manlius and Pompey town fair, held at Manlius, N. Y.; that the said Bramer worked and experimented on said mowing machines for many months and nearly a year prior to the completion of this machine exhibited at the Manlius fair; that the first iron frame made was a failure, and that other patterns were made before a successful frame was made; that he, Bramer, made different patterns for the gearing before he got a set of gearing that would succeed; he also threw aside the first set of drive wheels and made new drive wheels; that he, witness, made about $1,800 of castings for Bramer & Phil-

lips in the year 1864, most of which were for mowing machines; that he knew Frank Bramer intimately; that said Bramer was frequently at witness's house and stayed over night, and that witness was well acquainted with the business matters of said Frank Bramer.

490 Cross-examination by Mr. BANNING:

X Q. 1. How many driving wheels did George Eaton make for Frank Bramer in April and May, 1863?

Ans. I couldn't tell that.

X Q. 2. You say in your direct evidence that he made two driving wheels a day.

Ans. He had on two drive wheels which would make about one-half a day's work, and he finished with other work.

X Q. 3. Was this more than one day?

Ans. While he worked for me that time he worked on drive wheels every day.

X Q. 4. Then he made a good many pairs, did he?

Ans. Yes; sets you might say; I might have said he made a set a day.

X Q. 5. Was this during both April and May, 1863?

Ans. Yes, sir; according to my book here it was in 1863; seems he commenced April 1st and wound up May 30th. His principal work was on these mowing machines.

X Q. 6. That is, making the driving wheels for them?

Ans. Yes, sir.

X Q. 7. During the whole of the time?

Ans. I think so.

X Q. 8. And these driving wheels were for Frank Bramer's mowing machines?

Ans. Yes, sir.

X Q. 9. About how many mowing machines for Bramer would you say Eaton cast sets of drivers for?

491 Ans. I couldn't say. I had other moulders that worked after he left. I think he made about fifty machines that year; I couldn't be positive about that.

X Q. 10. But you are sure as to the year?

Ans. In 1863. I am sure from the accounts of my books.

X Q. 11. I find in your account with Frank Bramer this item: "August 26, 1863, 7 H cranks, 21 cents." Look at your book and see if this item does not appear.

Ans. Yes; that is a mowing-machine crank.

X Q. 12. Here is another item, under date of Aug. 22, 1863, where Frank Bramer is charged with "castings, etc., $8.11." You find that item, do you?

Ans. Yes, sir.

X Q. 13. Here is another item, of September 23, 1863, for "326 H castings, $9.78." You find that item, do you?

Ans. Yes; that is correct.

X Q. 13½. What would you say these items represented?

Ans. I should think, now, that they mostly represented mowing-machine work. He was doing other work besides.

X Q. 14. Here are items under dates of July 2, July 6, July 21, July 28, August 13, August 22, August 24, August 26, September 9, September 21, September 23, October 6, October 8, October 16, October 21, November 3, November 19, November 26, December 8, December 12, December 18, December 22, December 29. These items represent all of the account against Frank Bramer from July 1st to December 31st, 1863, do they not?

492 Ans. Yes, sir.

X Q. 15. None of these items specify the particular things made except the ones of July 21 for 87 of H "points" and August 26 for a "crank," do they?

Ans. No; not on the book they don't.

X Q. 16. Turning again to George Eaton's account, do you find the entries in April and May, 1863, and in July, 1864, to specify the particular things that he was at work upon during those times?

Ans. Nothing on the books to specify what he worked on. I remember his leading work was Bramer's drive wheels.

X Q. 17. Looking at the account of Frank Bramer, from the first of the year 1862 down to the 1st of July, 1863, do you find anything in the items to show that the work done was for parts of a mowing machine?

Ans. No, sir; the castings were put down "castings;" the mowing-machine business and the threshing-machine business were all mixed up; all the castings were one price, and that is the reason we didn't specify what they were for.

X Q. 18. Do you remember where Frank Bramer exhibited his first completed mowing machine?

Ans. I have no means of knowing that. He exhibited at the Manlius town fair every year after he got it completed while he was here.

X Q. 19. What year did you first see his machine on exhibition at this fair?

Ans. I think it must have been in 1863. I have no means of knowing certain.

X Q. 20. That was an iron-frame machine, was it?

493 Ans. Yes, sir.

X Q. 20½. These machines that George Eaton made driving wheels for were also iron-frame machines, were they?

Ans. Yes, sir.

X Q. 21. You do not remember the details of construction of these machines, I suppose, so as to be able to describe them fully?

Ans. I think the main thing he boasted on the most was on the cutter bar going over rough or uneven land it would drop into dead furrows and work the same as on smooth land.

X Q. 22. Was not the first thing that he talked to you about the tub or planetary gear which he proposed to use in the construction of a mowing machine?

Ans. No; it was not.

X Q. 23. I mean the principal thing he talked to you about during the first few weeks or months; wasn't that the tub gearing?

Ans. The tub gearing was his last invention to drive the machine.

X Q. 24. The principal work you did for Bramer & Phillips was in relation to their mowing machines, I believe?

Ans. Yes.

X Q. 25. You say that Frank Bramer worked and experimented on mowing machines for many months and nearly a year prior to the completion of the machine exhibited at the Manlius fair; you have no writings nor memorandum to refresh your mind as to the length of time he was experimenting, do you?

494 Ans. No, sir; I haven't.

Redirect examination by Mr. TALCOTT:

R. D. Q. 1. I wish to call your attention to your testimony as to the number of wheels cast by George Eaton; isn't it a fact that on reflection you would testify that Bramer did not enter extensively upon the manufacture of mowing machines until he went into partnership with Phillips, in 1864?

Ans. I think he must have made more when he was in with Phillips than he did the year before.

R. D. Q. 2. Do you say that Eaton cast a large number or a small number of sets of wheels for Bramer?

Ans. I couldn't tell how many; he made two a day when he got them good every time.

R. D. Q. 3. Do you know King H. C. Preston?

Ans. Yes, sir.

R. D. Q. 4. When did you first know him?

Ans. I first knew him at Manlius.

R. D. Q. 5. What year did you first know him and what was his business?

Ans. I have known him forty years, certain, or over. His business has been pattern-making for thirty years.

R. D. Q. 6. Did you ever know of his making mowing machines at Manlius?

Ans. Yes, sir.

R. D. Q. 7. When was it?

Ans. Do you mean the first machine he got up alone?

R. D. Q. 8. Yes, I do, and particularly the screw power.

495 Ans. I think it was in 1860 that he came here from De Ruyter with a model of a screw-power mowing machine.

R. D. Q. 9. Where did he go with his model and what did he do with it?

Ans. He came to my shop; I referred him to E. P. Russell and he went to see him, and they very soon struck up a bargain to manufacture them here.

R. D. Q. 10. Where did Preston make his headquarters or have a shop when he lived in Manlius?

Ans. He came here and worked for Mr. Russell, and Mr. Russell carried on the mowing-machine business. This was in 1860. He

stayed with Russell and Tremain about two years, I should think.

R. D. Q. 11. What did he afterwards do here in Manlius?

Ans. He came to my shop and I rented him room and power to manufacture mowing machines.

R. D. Q. 12. What machine did he manufacture in your shop, who helped him, and what finally came of it?

Ans. He made one machine with double drive; he called it a screw power.

R. D. Q. 14. What became of this first machine?

Ans. I think he sold it to Alanson Pope.

R. D. Q. 15. Did Preston continue to make this last machine?

Ans. No, sir.

R. D. Q. 16. What did he finally do with the right to make it?

Ans. He sold the right to make the screw power to Russell and Tremain, as I understand it.

496 R. D. Q. 17. Did you understand the construction of the machine the right to make which he sold to Russell and Tremain?

Ans. It was a screw power.

R. D. Q. 18. What did Preston do after he sold the screw-power machine to Russell and Tremain?

Ans. He got up a gearing machine that he called the "Onondaga Chief." They make it down here now, some of them.

R. D. Q. 19. What years did Preston make the screw-power machine he sold to Pope, if you remember?

Ans. I don't know, but I can tell something about it by this book. I think it was in 1862 (looking at the book). I can't certainly tell, but think it was in 1863 from the fact.

R. D. Q. 20. You referred to the Onondaga Chief after you examined the books and stated that it was in 1863, did you not?

Counsel for the complainants objects to the question as being leading, and asks defendants' counsel to simply inquire of the witness what machine was made in 1863 as stated in his answer last above, without specifying the name.

Ans. Yes; I think so. That first machine was sold to David Barber, and I find where I charged him with 6 guards, August 1, 1863, that I made for him.

R. D. Q. 21. Who made the castings for the screw-power machine that was sold to Pope?

Ans. I made them; they were made at our shop.

R. D. Q. 22. Who made the castings for the Onondaga Chief?

497 Ans. I made them; they were made at our shop.

R. D. Q. 23. Which of your men cast the drive wheels for the Onondaga Chief for Preston in 1863, if you remember?

Ans. I should think George Eaton moulded drive wheels for both machines, but I think after he left I moulded some myself.

R. D. Q. 24. What do you mean by both machines?

Ans. I mean Bramer and Preston's. They were both making machines at one time and I was making castings for both of them.

Recross-examination by Mr. BANNING:

R. X Q. 1. After examining your books, what year do you think it was that you made the castings for the screw-power machine for Preston?

Ans. I declare I think it was in 1862.

R. X Q. 2. Do you mean 1862 or 1863?

Ans. It must have been in 1863, I think.

R. X Q. 3. Do you mean that it was the year 1863 that he made the screw-power machine or the Onondaga Chief? Name the one you think Preston made in 1863.

Ans. The Onondaga Chief he made in 1863.

R. X Q. 4. Then what year did he also make the screw-power machine? Look at page 526 of your account book and then answer.

Ans. I should say that he made that screw power at my shop in 1862.

R. X Q. 5. What makes you name 1862 as the year when he made the screw power at your shop?

Ans. Well, from the fact that that was the winding-up of making castings for Russell and Tremain.

498 R. X Q. 6. What are these items on page 526 of your book before you, beginning with August 22, 1863?

Ans. Mowing-machine castings; he had no other castings; he had no other business.

R. X Q. 7. They are for castings that you made for Preston?

Ans. Yes, sir.

R. X Q. 8. What machine were they made for?

Ans. They must have been made for the Onondaga Chief.

R. X Q. 9. How do you know they were for the Onondaga Chief?

Ans. I think they must have been for that, from the fact that he only made one screw-power machine.

R. X Q. 10. Might not these castings, beginning with August 22, 1863, have been for the screw-power machine?

Ans. (Referring to the book.) Look back and see what you find. (After looking at all the pages and turning to page 526:) It is possible some of these castings went into the screw-power machine.

R. X Q. 11. Do you find a single entry in your books for castings made for Preston during the year 1862?

Ans. It don't seem that I do. I don't find nothing in 1862, though from circumstances I thought it was in 1862.

R. X Q. 12. From the fact that you find no castings made for King Preston during 1862, and from the fact that you made the
499 castings for his screw-power machine, do you not desire to assign 1863 as the year when you made the castings for that screw-power machine?

Ans. It must have been in 1863.

R. X Q. 13. And these items on page 526, beginning with August 22, 1863, represent the castings which you made for Preston for the screw-power machine?

Ans. Yes, sir.

R. X Q. 14. What do these items on page 66 for September 14,

1858; June 9, 1860; October 9, 1861, and October 19, 22, and 23, 1861, represent?

Ans. The item of September 14, 1858, represents castings for mowing machines. He was in in De Ruyter experimenting.

R. X Q. 15. Do the other items I have named relate to mowing machines?

Ans. No; they do not.

R. X Q. 16. On page 5 I find items under date of Oct. 25 and 27, 1861, and Nov. 4 and 9, 1861. What do the items under these four dates relate to?

Ans. I declare I don't know as I can tell. There is an item of 373 lbs. of casting in one item.

Redirect examination by Mr. TALCOTT:

R. D. Q. 1. What do you think these last castings in the item of 373 lbs. charged to Preston Oct. 25, 1861, was for?

Ans. I think it must have been for that one machine. I can't think what else it is for.

Recross-examination by Mr. BANNING:

R. X Q. 1. What parts did you make for the screw-power machine?

500 Ans. I made all the parts that were cast iron.

Redirect examination by Mr. TALCOTT:

R. D. Q. 1. Then, from examination of your books and finding no charges against Preston in 1862 and from the fact that you made no castings for him except for mowing machines and that you find a charge against Preston for castings under date of Oct. 25, 1861, you would testify, would you not, that Preston must have been making his screw-power machine in 1861?

Ans. Yes, sir.

Recross-examination by Mr. BANNING:

R. X Q. 1. This item of 373 lbs. of Oct. 25, 1861, does not specify anything particularly, does it?

Ans. No, sir.

R. X Q. 2. But under date of Sept. 1, 1863, we find the item of 7 lbs. of "guards" charged against Preston, do we not?

Ans. Yes, sir; they were finger guards for the finger bar of a mowing machine.

ALVAH WOODWORTH.

J. WILSON HOWE, a witness produced by the defendants, and being duly sworn, testifies as follows in answer to questions by Mr. TALCOTT:

Q. 1. State your name, age, residence, and occupation.

Ans. Name, James Wilson Howe; reside in Fabius, N. Y.; age, 47; occupation, a farmer.

Q. 2. How long have you lived in Fabius, on the farm where you now reside?

501 Ans. I was born there and have always lived there excepting a few years when I lived on the adjoining farm.

Q. 3. Have you in your possession a family record? If you have you may state what dates it covers.

Ans. I have a family record. There is one date of October 21, 1863. It commences in 1784 and runs down to 1875.

Q. 4. You may state what these records contain, if anything, with reference to your grandmother on your mother's side.

Ans. They state her birth, marriage, and death. Her maiden name was Polly Vail; born March 25, 1785; married Jan. 27, 1808; died Oct. 21, 1863.

Q. 5. In whose handwriting are these entries that you have read, if you know?

Ans. I couldn't swear positively, but suppose in my mother's.

Q. 6. Where has this record been kept since 1863?

Ans. In the house where I now live and where my mother lived until her death.

Q. 7. You are now living in the old homestead, are you not?

Ans. I am.

Q. 8. Are you willing to allow the counsel, Mr. Banning, to inspect this record and cross-examine you in reference thereto?

Ans. Yes, sir; I have no objection (handing record to Mr. Banning).

Q. 9. You may state whether or not you are able to

502 remember what work you were doing at or about your grandmother's death.

Ans. I had been cutting clover seed for a few days previous to her death.

Q. 10. In what lot?

Ans. In the lot west of the house, on the corner.

Q. 11. How near the Wallace farm?

Ans. The road between. There is a road on two sides.

Q. 12. How are you enabled to fix the date of this work upon this day?

Ans. It was getting pretty late in the fall. I had the clover all cut before her death, and I spoke to my mother after she died about drawing it in, with her lying dead in the house, having work folks, and so on; and she says, If it's dry enough I'd get it in. It won't make any difference; and so I drew it in the next day after she died. That would be the 22nd, the day before the funeral.

Q. 13. Did you know Frank Bramer, formerly of Fabius, in his lifetime?

Ans. I did.

Q. 14. At the time of the cutting of this clover in October, 1863, state whether you saw Frank Bramer there, what he had with him, and what he did, as far as you recollect.

Ans. I remember his coming from the East and he came past the house where we was at work in this clover, and he had a mowing machine and he stopped by the side of the road and talked about

his machine, and that is as far as I remember. I don't remember his cutting anything myself. There are other men that do, but I cannot say whether he did or not.

503 Q. 15. Did you examine this machine at that time?

Ans. I can't say that I did; I wasn't in condition to buy. It was a new machine; I mean by that it was recently got up.

Q. 16. What had you known of this machine prior to that time or where had you seen it?

Ans. Well, now, it is a good way back. I can't go back of the record, positive, but I was frequently in his shop while he was at work at it, and I was there the day he tried it in the road in front of Mr. Cadwell's. I happened to be there.

Q. 17. When, in reference to your grandmother's death, had you been in Frank Bramer's shop and seen him at work on this machine?

Ans. I couldn't give any dates; it was before that I saw him at work. There was quite an excitement over Frank Bramer's getting up a new machine.

Q. 18. How long a time prior to October 21, 1863, did you see Frank Bramer or his men at work on this machine, and how many times were you there?

Ans. I can't tell. I might have been there two or three times that summer.

Q. 19. When did you see this machine operated in front of Cadwell's place—how long before October 21, 1863?

Ans. It will be quite indefinite. It was when weeds got up and he was mowing there to see how it would run.

Q. 20. In this machine how was the finger bar attached to the main frame of the machine—by what devices?

504 Ans. I don't know, only what I heard said about it at the time.

Q. 21. What do you know about the Bramer machine being used in your vicinity in 1864?

Ans. I can't tell anything about it. I was at no trial.

Q. 22. Did you know or hear of any of your neighbors purchasing the machine in 1864?

Ans. I can't tell whether it was in 1863 or 1864. Milo Howe, a cousin of mine, bought a mowing machine of the Bramer pattern.

Cross-examination by Mr. BANNING:

X Q. 1. At the time you saw Mr. Bramer trying a machine on the roadside near his shop, was your brother John J. Howe, with you?

Ans. Yes, sir; I think we went to the village together.

X Q. 2. That was some time during the summer of 1863, was it not?

Ans. I should say it was; I wouldn't want to be positive.

X Q. 3. But that is your best recollection?

Ans. Yes, sir.

X Q. 4. That trial was made with a wooden-frame machine, was it not?

Ans. I couldn't say as to that.

X Q. 5. I will read you direct question "20" and answer of the deposition given by John J. Howe, and ask you if that does not refresh your recollection as to the kind of frame?

505 Ans. I don't see how that helps me any as to the kind of frame. I don't remember about the kind of frame used at that time.

X Q. 6. I will also read you R. D. Q. 1 and 2 and their answers of John J. Howe's deposition, and ask you if your recollection corresponds with his as to the time of year that you saw this trial by the roadside at Bramer's shop?

Ans. No, sir; I don't remember about the weeds going out of blossom.

X Q. 7. How late do these May weeds remain in blossom?

Ans. I can't tell; I can't tell what time they blossom—whether July or August.

X Q. 8. John J. Howe is your brother?

Ans. Yes, sir.

X Q. 9. Hasn't a change been made both in the year of your grandmother's birth and the year of her death, as appears by this record?

Ans. Not to my knowledge.

X Q. 10. Look at the year 1785, given as the year of her birth, and tell me if it does not appear that the 5 was written where some other figure had originally been and which had been erased.

Ans. It has that appearance.

X Q. 11. Look at the year 1863, given as the year of her death, and state if it does not appear that something else was originally written under the year 1863.

Ans. It looks under the "1" as if a blot or mark had been erased and made over again.

506 X Q. 12. Look carefully at both the figures "8" and "6," with the light on them, and state whether there is not the appearance of there having been some other marks there over which these figures have been written.

Ans. I don't claim to be an expert, but I should say not. The "1" looks as if she had started to make an "8" and had erased it and made a "1" instead—as if she had made a mistake.

X Q. 13. Isn't there an appearance of another figure having been made under the figure "8" that does not come down as far as the "8" does?

Ans. I should say not.

X Q. 14. Don't you see a mark there as I have described?

Ans. I see a little mark across the bow of the "8," but should not call it a figure.

X Q. 15. Between the "8" and the "6," and running up under the "6," can you see the mark of a pen?

Ans. I can't say that there is.

X Q. 16. This record contains twenty-three entries of births and deaths, and perhaps more. Do you find any year, either of births

or deaths, in which there is any appearance of an alteration, not referring now to those years giving the birth and death of Polly Vail?

Ans. No; I don't discover any.

Redirect examination by Mr. TALCOTT:

R. D. Q. 1. Do you discover any appearance whatever that the date in this record of Oct. 21, 1863, is an altered date in any respect, or that the date has been changed?

507 Ans. No, sir; it has never been changed from the time she made them; I'll warrant that. I'll guarantee they are just as she left them. I don't know what year she made them. They were always in her possession, and have never been out of the box where she kept them till the other day, that I know of.

R. D. Q. 2. State whether or not all the handwriting of this record has the appearance of being old and yellow and faded somewhat, and state the condition of the paper as to its being old.

Ans. All but one exception. There is one made with a lead pencil. It has the appearance of being an old paper and yellow with age.

R. D. Q. 3. State what this record contains besides the record of dates.

Ans. Poetry, hymns, and songs my father used to sing; a composition by my mother's uncle.

J. WILSON HOWE.

WILLIAM W. CANDEE, a witness produced by the defense, being duly sworn, testified as follows in answer to questions by Mr. TALCOTT:

Q. 1. State your name, age, residence, and occupation.

Ans. William W. Candee; 41 years of age; residence, Manlius, N. Y.; retired farmer.

Q. 2. How long have you lived in this vicinity?

Ans. All my life.

Q. 3. Do you recollect of being at a trial of mowing machines in which a machine made by Frank Bramer took part? If you do, state when it was, where it was, and all about it.

508 Ans. I do. I think it was in 1864 in the town of Pompey, on a farm owned by Leander Woodward. I was there with M. R. Dyer, agent for the Buckeye, and there were several machines there.

Q. 3½. Do you know the names of the different machines that were there?

Ans. I remember the names of several—Buckeye, Kirby, screw power Bramer machine, and a machine, I think, called the Champion.

Q. 4. State what the result of this trial was—that is, which machine succeeded in doing the best work in the estimation of the judges.

Ans. The Bramer and Buckeye were liked the best, and as for work were considered equal. The Bramer seemed to have the pref-

erence from the fact it was built at home and could be repaired quicker on that account.

Q. 5. In what season of the year was this trial held?

Ans. Would not say positively, but should think it was in the month of June.

Q. 6. Do you know whether any sales of the Bramer machines were made in that vicinity?

Ans. I did not see any sales made.

Q. 7. Did you hear of any?

Ans. I did.

Q. 8. State what you have heard about it.

Ans. Mr. Woodward bought a machine. I understood that Hiram McClure purchased one. I saw in use that season several. I don't think of anything more I know about the machine.

WM. W. CANDEE.

509 Adjourned, by consent of counsel, until June 10, at 8.30 o'clock a. m.

JUNE 10, 1887.

Met pursuant to adjournment.

Present: As before.

HIRAM MCCLURE, a witness produced by the defendants, being duly sworn, testifies as follows in answer to questions by Mr. TALCOTT:

Q. 1. State your name, age, residence, and occupation.

Ans. Name, Hiram McClure; age, 56; residence, Pompey; occupation, farmer. I have lived in Pompey all my life, except four years I was in Allegany county.

Q. 2. Were you present at a trial of mowing machines had on the farm of Leander Woodward, of Pompey, when a machine made by Frank Bramer, of Fabius, was tried?

Ans. I was; we joined farms.

Q. 3. State when such trial was held, what other machines, if any, were tried, who was present, and state what was the result of the trial. State fully.

Ans. The trial was the 18th day of June, 1864. Mr. Matthias Berry was there with the Kirby machine, made at Auburn. Russell and Tremain, of Manlius, had the machine they called the screw power. They have gone out of date years ago. There was a man named Wallace; he had a machine called Pine's patent—called the "Farmer"—made in Troy, I think. There was a man there with a Buckeye; I can't think of his name; he lived
510 in Cazenovia. I think that was all the machines represented besides Bramer's. They appointed a committee, who staked off a piece of ground for each machine, and they went at it and went to mowing. Well, this committee, my remembrance is, didn't decide. I got onto two machines only and drove them; that was this Pine machine and Mr. Bramer's. Well, I liked the operation of Mr. Bramer's and bought it right there. Mr. Woodward didn't

buy any on that day. When he commenced haying, soon after, his own machine didn't operate satisfactorily; it was an old Walter Wood combined mower and reaper. He came down to my house and took my machine to try; went to Fabius immediately and bought one of Mr. Bramer; by the way, he wore out that machine (he didn't use it as carefully as I did mine), and bought another made by the same party at Little Falls.

Q. 4. Had you, prior to that time, seen a Bramer machine substantially like the one purchased by you June 18, 1864?

Ans. Yes, sir; I had.

Q. 5. Where was it?

Ans. Here at Manlius, at the fair, in the fall of 1863; the precise date I can't give. I know it was the fall before I bought mine.

Q. 6. Did you examine the machine you saw at the fair?

Ans. Yes, sir; considerably.

Q. 7. Did you see them running it?

Ans. I don't think they did run it.

Q. 8. Look at the "Defendants' Exhibit Bramer 1865 Pat-
511 ent," and state whether the drawings in such patent substantially represent the Bramer machine seen by you at the Manlius fair, held in 1863, and also the machine purchased by you in 1864.

Ans. Yes, sir; they do.

Q. 9. You may state where that machine purchased by you in 1864 is now and what work has been done with it since.

Ans. It is now in my barn on my farm in Pompey, where I put it up last fall. It was in good condition, it did a good job of mowing, and I expect to mow with it this year. I have mowed with it every year since I purchased it.

Q. 10. Now, Mr. McClure, state whether or not any alterations have been made on that machine since you purchased it, what such alterations were, if any, and whether such alterations have made any change whatever substantially in the operation of the machine.

Ans. He, Bramer, took the snipe bill that attached the main brace to the frame of the machine and substituted a ball and socket. He also took the loop off from said brace and substituted the block "*l*;" the machine worked the same. This was before the haying of 1865 that these changes were made.

Q. 11. State what the loop was you referred to and also the block, and what the object of both was.

Ans. The push brace went into the loop and that gave this rolling motion to the finger bar. It allowed the rolling motion, perhaps would be more proper. The block was to enable you to make it a stiff bar if you desired. This was done by a bolt that went clear through the brace and block.

512 Q. 12. State whether or not the office of the block and the loop were the same, and state fully the office of the block.

Ans. The push bar was fastened to the block so as to allow the finger bar to roll, and then it also had this screw that you could put through so as to prevent its rolling.

Q. 13. How did this ball and screw operate with you?

Ans. Well, I had some heavy clover that was lodged, and this finger bar when it tipped up was inclined to slip over and didn't cut it just as I wanted it to. I put in the bolt to prevent that motion of it tipping up, and the bolt bent and didn't hold the bar, and I took it out and threw it away and never put one in since, let it tip up or down just as it was a mind to.

Q. 14. You may state who of your neighbors bought those Bramer machines in 1864.

Ans. I don't know of but three of those machines being bought in that vicinity that season; these were mine, Leander Woodward, and Thomas Galloway.

Q. 15. You may state whether the finger bar in your machine had the same motion or was allowed the same motion by the devices by which it was attached to the frame before the changes were made as it did after the putting on this block and ball and socket joint, and what such motion was.

Ans. It had the same motion before the changes as it did after and the same after as it did before. As the bar moved along and met a stone it would tip up and go over it and fall back again.

513 What I was going to say was that when I had the bolt it went up and bent the bolt and wouldn't go back again.

Cross-examination by Mr. BANNING:

X Q. 1. Other witnesses have testified about the machine at the Manlius fair that the loop with the brace bar passing over the top of the main brace would prevent the points of the guard from tipping down; was this not also true of your machine while you used the loop?

Counsel for the defendants states that no witness has ever testified as stated, to his knowledge, that has seen the machine work, and he objects to the question without calling attention to particular testimony.

Question withdrawn.

X Q. 2. These changes were made at Frank Bramer's shop, were they not?

Ans. Yes, sir.

X Q. 3. How far is your farm from Fabius, where the changes were made?

Ans. About seven miles.

X Q. 4. Did Bramer ask you to bring your machine to his shop in the early summer of 1865 to have these changes made?

Ans. He said if I would bring it there he would make them, and I did so.

X Q. 5. What kind of a machine was this screw-power machine made by Russell and Tremain?

Ans. It was a combined machine; it had no rocking motion of the finger bar.

514 X Q. 6. Was it a heavy machine?

Ans. It was a great deal heavier than the Bramer machine; if there was one in existence now it would be a curiosity.

X Q. 7. You were interested in this trial with a view of buying a machine, were you not?

Ans. Yes, sir.

X Q. 8. Did you, on that account, examine the machines carefully in their construction and operation?

Ans. I did.

X Q. 9. You rode the Pine machine some, I believe you said. Did it have the rocking motion to the finger bar?

Ans. No, sir; it did not; it was a stiff bar and you couldn't fold it up.

X Q. 10. Did the Buckeye have this rocking motion to the finger bar?

Ans. No, sir.

X Q. 11. I believe you have said that the screw-power machine did not have this rocking motion; are you sure of that?

Ans. Yes, sir.

X Q. 12. The Russell and Tremain who made that screw-power machine made it at Manlius, did they not?

Ans. Yes, sir.

X Q. 13. When did you first see one of the screw-power machines?

Ans. Well, now, I can't state when I first saw one.

X Q. 14. Who was the inventor of that machine, if you know?

Ans. I do not know.

515 X Q. 15. When did you first see a mowing machine called the Onondaga Chief?

Ans. It was after this trial a year or two, I should judge; perhaps longer than that.

X Q. 16. Who built that machine?

Ans. I am not certain; I don't know; I think it was Russell and Tremain.

HIRAM McCLURE.

CHARLES W. H. WOOD, a witness produced by the defendant, being duly sworn, testifies as follows in answer to questions by Mr. TALCOTT:

Q. 1. State your name, age, residence, and occupation.

Ans. Name, Charles W. H. Wood; age, 57; Manlius, N. Y.; occupation, edge-tool maker.

Q. 2. Did you ever make sections for cutter bars for mowing machines?

Ans. I have.

Q. 3. For how many years?

Ans. For about four years.

Q. 4. How many years ago did you make the first?

Ans. From in 1862 to about 1864.

Q. 5. When is the first date of your charges for making sections, if you have any such charges on your books?

Ans. January 22, 1862.

Q. 6. Have you the original book on which this charge was made?
Ans. I have.
Q. 7. Will you produce the book and read the charge, so that the notary may take it down?
516 Ans. I will. The entry is as follows:

"Russell & Tremain, Dr.

To 1,150 guard knives ---------- $37 38"

Q. 8. This entry is correct, and was it made at the time the work was done?
Ans. Yes, sir.

Counsel for defendant offers the counsel for the complainants the books produced by witness, that the same may be inspected and that the witness may be cross-examined in relation thereto.

Q. 9. Where did Russell and Tremain live, and what did they do?
Ans. They both lived in the town of Manlius. They manufactured mowing machines called the screw power.
Q. 10. Who invented this screw-power machine, if you know?
Ans. K. H. C. Preston.
Q. 11. Where did Mr. Preston live when you first knew him?
Ans. In the town of Manlius.
Q. 12. What did he do?
Ans. When I first knew him he was a chair-maker, and afterwards he worked at mowing machines.
Q. 13. State what connection Mr. Preston had with these screw-power mowing machines. State all you know about it.
Ans. After the invention of the machine he sold it out to either Russell and Tremain or E. P. Russell—I think to E. P. Rus-
517 sell. He worked for Russell and Tremain in the manufacture of the machines. He afterwards invented a machine called the Onondaga Chief.
Q. 14. Have you other charges on your books against Russell and Tremain for mowing-machine fixtures?
Ans. I have, covering the period from June 8, 1861, to some time in 1864.
Q. 15. Have you any charges against Russell and Tremain for parts of mowing machines prior to the charge for sections in 1862?
Ans. I have—
June 8, 1861, making 55 straps;
June 11, " " 97 "
June 25, " " 73 "
June 25, making 100 cutter-bar heads and 100 seat irons;
June 28, making 30 seat springs and 17 rods;
July 1, 20 pair springs;
July 11, 20 cutter-bar heads;
July 15, 21 rods;
July 20, 28 springs;
and other charges following along. These were for the screw-power machines invented by said Preston, and these charges are from my original account books now in my possession.

Q. 16. Did you know Frank Bramer, formerly of Fabius, in his lifetime?

Ans. I did.

Q. 17. Did you ever do any mowing-machine work for him?

Ans. I did.

518 Q. 18. When was it, and what was it?

Ans. 12th of October, 1863; I made him six dollars' worth of sections.

Q. 19. Have you the book containing original charge for this work for Frank Bramer made at the time?

Ans. I have, and it was made at the time the work was done.

Q. 20. Read the original charge in full, so that the notary may take it down.

Ans.—

Frank Bramer, Dr.

1863, October 12. To sickles $6 00

Q. 21. How many sickles does this represent?

Ans. It would be from 50 to 60—that is, sections.

Q. 22. How many cutter bars could be made out of these sickles, taking an ordinary machine as your guide?

Ans. Three; I never made any cutter bars. I can't tell the size of the sickles. My recollection is that I made them under size especially for him.

Cross-examination by Mr. BANNING:

X Q. 1. What, if anything, did Bramer tell you about the use he intended to put these sickles that he got from you to?

Ans. I am unable to state.

X Q. 2. What was your understanding at the time?

Ans. I supposed he was going to use them on a machine.

X Q. 3. Did you see the machine that Bramer exhibited at the Manlius and Pompey fairs that same fall of 1863?

519 Ans. I am not prepared to say that I did. I have seen his machines at the fairs, but can't state the years.

X Q. 4. Did the machine which you saw at the fair have the sickles on that you had made?

Ans. I don't know whether they were the sickles I made or not.

X Q. 5. Was that the first work in relation to mowing machines that you have done for Bramer?

Ans. I think it was.

X Q. 6. What machine was this work you did for Russell and Tremain to be used in, if you know?

Ans. The screw power.

X Q. 7. When did they manufacture the screw power machines; what years?

Ans. From 1861 to about 1866.

X Q. 8. Did that machine prove a success or a failure?

Ans. Well, I should say it was a failure of the two.

X Q. 9. Did Russell and Tremain make any other kind of mowing machine besides this screw power?

Ans. I am not prepared to say. I think they made a few of the Onondaga Chiefs, but I am not certain; at least I didn't do any work on them.

X Q. 10. What were these cutter heads you made for Russell and Tremain?

Ans. It was the head of the cutter bar they hitched the pitman to; the cutter bar was welded onto it.

X Q. 11. Could the cutter bar of that screw-power machine be folded up?

Ans. I think it could.

520 X Q. 12. Did you ever see that machine in operation cutting grass?

Ans. I have on my father's land, about two miles south of here, in Pompey. I can't give the year, but it was early in the manufacture of the machine. I think it was the first machine seen out of the shop.

X Q. 13. Where is that machine now?

Ans. I don't know.

X Q. 14. How long did your father use it?

Ans. Well, he didn't own the machine.

X Q. 15. Who did?

Ans. Harmon Baker. He is still living in this village.

CHARLES W. H. WOOD.

STEPHEN CHENEY, a witness produced by the defendants, being duly sworn, testified as follows in answer to questions by Mr. TALCOTT:

Q. 1. State your name, age, residence, and occupation.

Ans. Name, Stephen Cheney; age, 56; residence, Manlius, N. Y.; occupation, machinist and foundryman.

Q. 2. How many men have you in your employ?

Ans. Our pay-roll was 115 last Saturday night.

Q. 3. Do you know K. H. C. Preston?

Ans. I do.

Q. 4. Were you ever in partnership with him? If so, state when and what you did.

Ans. Yes, sir; it was in the fall of 1866, building mowers and reapers.

Q. 5. How long have you known Preston and what was his business?

521 Ans. I had known him five years prior to that. His business was a machinist, pattern-maker, and carpenter. He was a foreman for Russell and Tremain in 1861 when I first knew him. They made mowing machines and reapers.

Q. 6. Did you ever know of Preston inventing or getting up a mower?

Ans. I've known of his getting up two or three.

Q. 7. When was the first and what was it called?

Ans. It was in 1861 and was called the screw power; the next one was what he called the double-drive-wheel screw power.

Q. 8. State if you were ever with Russell and Tremain and when and how it was.

Ans. It was in the fall of 1861. I engaged myself to Russell and Tremain to take the place of Preston, who was their foreman, and I got acquainted with Preston at that time and knew his business.

Q. 9. You may state how, in the Preston machine, if you can—how the shoe or finger bar on the shoe was attached to the drag or push bar, stating, first place, whether it was a rear or front cut machine.

Ans. It was a rear-cut machine. There was a Preston machine and a screw power besides that.

Q. 10. I mean the screw power as improved by Preston, the right to make which he sold to Russell and Tremain.

Ans. Well, there was a disagreement between Preston and Russell and Tremain about the improvements he put on the screw power. They settled that and they hired me as foreman to take his place. Do you want a description of the drag bar on that machine?

522 Q. 11. Yes; go on.

Ans. That was an inch-and-one-half round bar hinged on the left-hand front of the corner, running diagonally across to within about a foot of the back-end right corner, then bent parallel with the frame, and the shoe was shaped on the back end of the bar, with a round hole to admit of the end of the bar, and slotted, I should judge, about two and one-half inches to admit about an inch play up and down. That was to allow the front of the shoe and guards to rock up and down.

Q. 12. When was this machine built?

Ans. This machine was built in 1860 and 1861 and right along up to 1867, I think.

Q. 13. Did Preston make an improvement on this machine, and when was it and what became of the machine?

Ans. He left Russell and Tremain and went to work up to Mr. Woodworth's, and he got up another screw power, an improvement he built on his own hook; this was in 1862; that, I think, he sold to a man by the name of Pope; I won't be positive.

Q. 14. How was the drag bar attached to the shoe in this machine?

Ans. I don't think I can remember.

Cross-examination by Mr. BANNING:

X Q. 1. Was this screw-power machine built by Russell and Tremain ever patented?

Ans. I suppose it was.

X Q. 2. Were the machines marked patented?

Ans. Yes, sir; I think they was.

523 X Q. 3. Did Preston get a patent on what you have called his improved machine?

Ans. I suppose he did.

X Q. 4. How do you know that it was in 1862 that Preston got up his improved machine?

Ans. Because he went to work after he left Russell and Tremain.

X Q. 5. What time did he leave Russell and Tremain?

Ans. In the fall of 1861. I think it was along in October, still I won't be positive; I couldn't swear positive. I went to work the 8th day of November and he quit a short time before that.

X Q. 6. Do you know where he got his castings made for his improved machine?

Ans. I think he got them at Whitney and Woodworth's.

X Q. 7. When do you state, from your best recollection, that he got his castings for his improved machine?

Ans. I couldn't state.

X Q. 8. Hiram McClure has stated in his deposition this morning that the screw-power machines made by Russell and Tremain had no rocking motion to the finger bar. This is correct, is it not?

Ans. What was that slot for? But I think I have made a mistake in the slot on that shoe; the round hole is in front of the shoe and the slot in the back.

X Q. 9. Then the Russell and Tremain screw-power machine had no rocking motion of the finger bar. Is not this correct?

524 Ans. I shouldn't think it was. I should think there was a rock to the finger bar.

X Q. 10. How long has it been since you saw one of these screw-power machines in operation?

Ans. I couldn't state. I saw one in my old iron pile.

X Q. 11. How much of it was there?

Ans. Frame, screw and drive wheels, drag bar and shoe.

X Q. 12. Can I see it if I come down to your place?

Ans. I don't think you can. Our scrap-iron pile is used up and these are melted up.

X Q. 13. In view of the length of time that has elapsed since you were at work on those screw-power machines, do you wish to swear positively that the finger bar could freely rock up and down in operation?

Ans. Why I think it could; I don't see any reason why I should say it was a hinged bar, not a rigid bar. I don't really think it was what was called a hinge bar, but there certainly was a rock up and down to that bar.

X Q. 14. Do you know where I can find one of those old machines?

Ans. No, sir; I don't know. I can make inquiries this afternoon.

X Q. 15. I believe we have misunderstood each other in reference to the rocking motion of the finger bar. Did you not in your answers above refer to the ability of the outer or inner end of the finger bar to rise or fall?

Ans. No, sir.

525 X Q. 16. In what respect did the improved screw power that Preston got up differ from the ones that Russell and Tremain made?

Ans. I think the main feature was two drive wheels.

X Q. 17. Then the Russell and Tremain screw powers only had one driving wheel?

Ans. That is all.

S. CHENEY.

Case adjourned to the Girvan House, at Little Falls, N. Y., by consent and agreement of counsel, and it is also stipulated by the counsel for the respective parties that the testimony at Little Falls, N. Y., may be taken before Charles H. Wheaton, a notary public of Onondaga county, N. Y.; that said evidence so taken by said notary may be read at the final hearing of this cause with the same force and effect as if taken before and by a notary public of the county of Herkimer, New York.

LITTLE FALLS, N. Y., *June 13th*, 1887.

Met pursuant to adjournment.
Present: As before.

Mrs. AUGUSTA BRAMER, a witness produced by the defendants, being duly sworn, testified as follows in answer to questions by Mr. TALCOTT:

Q. 1. Please state your name.
Ans. Augusta Bramer.
Q. 2. Are you the widow of the late Frank Bramer?
Ans. Yes, sir.
526 Q. 3. When did Mr. Bramer die?
Ans. He died three years ago last December.
Q. 4. How long prior to his death had Mr. Bramer been ill or complaining of poor health?
Ans. I don't know as I can tell you exactly how long he had been ill, but it was as much as two years before he went to the sanitarium, which was May 9, 1882.
Q. 5. What was one of the main causes of his ill health?
Ans. He had the heart disease and died with that.
Q. 6. Mr. Bramer was connected with the Warrior Mower Company of Little Falls, was he not?
Ans. Yes, sir.
Q. 7. Do you recollect of the fact of there having been differences between the Warrior Mower Company and Alvaro B. Graham, and that Graham made a claim against the Warrior Company, which was afterwards settled?
Ans. I do.
Q. 8. If you remember any of the reasons why such settlement was made, or if Mr. Bramer stated to you at that time or about or after that time any reasons why such settlement was made, you may state them and state them fully.
Ans. Well, in the first place, he said to me that he wanted to keep out of litigation, if possible, on account of his time and expense, and another very important reason was that the president of the company was quite aged, and that it would be exceedingly annoying to him, the judge (Loomis), to have anything of that kind going on.
527 Q. 9. About what time did he make this statement to you?
Ans. It was about the time of the settlement; it was about that time he was saying this to me, and this was the time he said the most about it.

Q. 10. Where was Mr. Bramer at or about the time this settlement was made?

Ans. About that time we were in New York. I think we were at the Grand Union Hotel in New York. I won't attempt to state exactly where we were, but anyway we were talking about the settlement.

Q. 11. What was the reason, if you remember, of your getting to talking about this settlement? Did you receive a letter about that time in reference to it?

Ans. Yes; Mr. Bramer received a letter from Mr. David H. Burrell at that time.

Q. 12. Was Mr. Burrell in any way related to either you or Mr. Bramer?

Ans. No, sir; he acted as agent, I believe.

Q. 13. Was he connected in business with Mr. Bramer in any way prior to that time?

Ans. Not any more with Mr. Bramer than with any other business man at that time, wherever he could come in.

Q. 14. How was Mr. Burrell connected with Judge Loomis, the president of the company?

Ans. He was his son-in-law; said to be.

Q. 15. If Mr. Bramer said anything else to you with reference to this settlement with Graham, please state the substance of it, if you remember.

Ans. I don't remember that he did.

528 Q. 16. In what condition was his health at that time?

Ans. Poor, very poor.

Q. 17. State if he was troubled with heart disease and wished to avoid excitement at that time.

Ans. He thought that he was troubled with heart disease. He was not sure, but thought he might be. He said so at the very beginning of his sickness.

Q. 18. Did Mr. Bramer formerly reside at Fabius, N. Y.?

Ans. He did; from about 1860 to 1867. He was living there — 1863. He was a manufacturer there.

Q. 19. Do you recollect of some of the different machines manufactured by Mr. Bramer at Fabius?

Ans. Yes; I can remember that he made cheese presses, clover hullers, horse-powers, and mowing machines.

Q. 20. Which of these articles did Mr. Bramer invent?

Ans. I can't tell you what he invented with regard to these machines.

Q. 21. How many children have you?

Ans. I have one daughter.

Q. 22. Will you state when this daughter was born?

Ans. July 12, 1863.

Q. 23. With reference to the time your daughter was born and taking that as a date, you may state whether you know of Mr. Bramer's being engaged at that time, or immediately prior to that time, in the invention of or experimenting in any new machines.

529 Ans. I couldn't swear to that. I know of his working on machines, but couldn't state what kind of machines.

Q. 24. State what he said or all what you know he was doing on anything new at that time.

Ans. I couldn't state what he was doing at that time, but know that he was interested in some machine.

Q. 25. Was it something new?

Ans. I couldn't swear to that, but it was something he was very much interested in. My impression is that it was a mowing machine, but I couldn't say positively.

Q. 26. Were the other machines that you have mentioned new machines or had they been made for some time prior to 1863 by Mr. Bramer?

Ans. Never knew of his making any inventions except in the mowing machines; the other machines were some that had been manufactured in that shop before I knew Mr. Bramer.

Cross-examination by Mr. BANNING:

X Q. 1. What year did you come to live at Fabius?

Ans. I couldn't state without looking it up.

X Q. 2. What year were you married to Mr. Bramer?

Ans. In 1855 I think it was.

X Q. 3. I believe you said that you had no record showing the date of your daughter's birth?

Ans. I have none.

AUGUSTA BRAMER.

Mrs. NELLIE B. SMITH, a witness produced, sworn, and examined on the part of the defendants, testified as follows in answer to questions by Mr. TALCOTT:

530 Q. 1. State your name and residence.

Ans. Nellie Bramer Smith; residence, Little Falls; I am the daughter of Frank Bramer.

Q. 2. You may state where you were in 1881 in the latter part of the year and what the condition of your father's health was; state fully the condition of his health from that time until his death.

Ans. In September, 1881, I went to Syracuse to attend school, and some time before that the physicians had told my father he had the heart disease. The physicians who examined him were Dr. Swinburn, of Albany, and Dr. Seymour, of Troy, and he was under Dr. Seymour's treatment at the time, and there was considerable hesitancy about my going away on account of his health, and it was arranged that I was to come home every four weeks to stay over Sunday. It was a good while before September, 1881, that he complained. He used sometimes to come home and would think he was almost dead on account of business that had excited him, but as early as March or April, 1882, I received a telegram to come home immediately on account of the serious illness of my father. At that time I was home about four weeks and we thought he was better and I went back. He was able to be around a little. About a week

after that I received another telegram to come home and found him very sick again. About the first of May, 1882, he was in such bad condition from heart disease that we took him to the sanitarium at Clifton Springs. From that time on he was very sick all the time until he died; the doctors there said he had heart disease and
531 was a much sicker man than anybody ever thought and must have lived on pluck for several years.

Q. 3. State whether or not your father was in a fit physical condition, in your opinion, from the spring of 1881 until the time of his death to do business.

Ans. His mind was perfectly clear, but he certainly was not in a physical condition. He should have given up long before.

Q. 4. Do you know whether your father had intimate personal or business relations with David H. Burrell at any time?

Ans. I think they were supposed to be friends, but at the time of my father's death they were not friends. It is very doubtful if they were friends.

Q. 5. Do you know, from any conversations with your father or other officers of the Warrior Mower Company, who had the sale and exclusive financial or business management of the company?

Ans. I can't say who I know it from, but I know that he did not have sole management of the financial business of the company. There was a board of directors.

Q. 6. State who the directors and president were in 1881.

Ans. Judge Loomis was president. The directors were Dr. Sharer, William Dow. There were several changes about that time.

Q. 7. You may state whether you know anything about the settlement with the Warrior Mower Company with Graham, or whether you heard anything said about it at the time. If you did, please state it.

532 Ans. I can't say just when I heard it, for I didn't take much interest in those matters then, but I have heard it said some time—a good while ago—I can't say positively who I heard say it—that the settlement was made to avoid litigation and because it was advised by Judge Loomis, the president of the company, and I know that my father was not in the habit of paying out the money of the company or taking any important step without consulting those who were interested in the business of the company.

Cross-examination waived by Mr. Banning.

NELLIE BRAMER SMITH.

By agreement of counsel, cause adjourned to the Globe Hotel, at Syracuse, N. Y.

SYRACUSE, N. Y., *June* 14, 1887.

Met pursuant to adjournment.

Present: As before.

KING H. C. PRESTON, a witness produced, sworn, and examined on the part of the defendants, testified as follows in answer to questions by Mr. TALCOTT:

Q. 1. State your name, age, residence, and occupation.

Ans. Name, King H. C. Preston; age, 61; residence, Syracuse; occupation, pattern-making.

Q. 2. State briefly what experience you have had, if any, in the manufacture of mowers or parts of mowers.

Ans. I have got up several mowers; since 1859 have man-
533 ufactured some myself. Besides, in connection with others, I have made parts of mowers or the whole, either.

Q. 3. What parts of mowers have you made especially?

Ans. I have made finger bars that includes the guards finished up after they were cast. I'll explain what we mean by making finger bars. We get the guards in the rough and plates; finish up and put onto the finger bar.

Q. 4. Where were you residing in 1858 and for the next succeeding ten years?

Ans. In 1858, in De Ruyter, but removed to Manlius in 1859 and resided in Manlius for ten years longer.

Q. 5. State if you were acquainted with Frank Bramer in his lifetime.

Ans. I was first acquainted with him in 1858.

Q. 6. What work, if any, did you do for Frank Bramer?

Ans. About the first I can remember was making a guard or finger pattern.

Q. 7. When was that?

Ans. I think that was in 1862, in the latter part of the year; couldn't tell exactly.

Q. 8. Where were you residing at that time?

Ans. At Manlius.

Q. 9. How came you to make this pattern for a finger for Frank Bramer; where was your shop in Manlius, and what were you doing at that time?

Ans. Made at his solicitation. My shop was at Woodworth and Whitney's, in Manlius. I was doing jobbing pattern and machine work as I had it to do.

534 Q. 10. State whether or not you had any conversation with Frank Bramer about that time about manufacturing mowing machines, if you recollect.

Ans. I did. He said that he was getting up a new machine, a mower.

Q. 11. What sort of a pattern did you make for him? I mean for what kind of a finger bar, whether it was hinged or not.

Ans. I couldn't tell nothing more than I made a finger. He could use it on any bar that was adapted to that size. It was two and one-fourth inches wide.

Q. 12. Now explain to the court what you mean by a pattern for a finger. What use was made of it?

Ans. It is a wood pattern to cast metal from.

Q. 13. Was this finger pattern larger or smaller than the average finger?

Ans. Smaller.

Q. 14. Why was it made smaller?

Ans. It brings the guards close together; prevents stones getting into the knives so readily.

Q. 15. What other work, if any, did you do for Mr. Bramer?

Ans. About the same time I made the outside shoe, as we called it.

Q. 16. Describe this shoe particularly.

Ans. Well, it is a large guard finger adapted for the outer end of the finger bar. I didn't make the inside shoe.

Q. 17. What other work, if any, did you do for Mr. Bramer on mowing machines?

535 Ans. I think I put up the bar in 1863—one finger bar. I mean by putting up making, as has been termed.

Q. 18. What sort of a finger bar was this? State whether it was hinged or not.

Ans. I don't think I put the inside shoe on. I don't know whether it was hinged or not at that time. Afterward I knew of the bar being hinged to the machine. I saw the machine. I presume it was the same bar; I could not be positive.

Q. 19. Describe the bar.

Ans. I can't exactly answer that. I can describe the connections. The connection was connecting the bar to the frame of the machine.

Q. 20. About what time in 1863 did you make this finger bar?

Ans. In the fore part of the season, some time between April and September.

Q. 21. How were the finger guards on this bar as to being close together or not?

Ans. They were close.

Q. 21½. When did you afterwards see a machine made by Frank Bramer having a finger bar substantially like the one you made?

Ans. In October, 1863; at the Manlius and Pompey town fair.

Q. 22. In this machine how was this finger bar connected with the frame of the machine? State particularly.

Ans. With swivel and universal joints.

Q. 23. For what purpose was this connection made? I mean what would be the effect on the finger bar.

536 Ans. It would allow of the finger bar to conform to the inequalities of the ground, independent of the frame, both in line with the draft and at right angles with the draft.

Q. 24. What other work, if any, did you do for Frank Bramer or Bramer and Phillips?

Ans. Made fifty finger bars in the spring of 1864; made them for Bramer and Phillips at Manlius, at Woodworth and Whitney's shop.

Q. 25. What part of the work on these finger bars did you do?

Ans. I think I did the whole work.

Q. 26. Look at the "Defendants' Exhibit Bramer's 1865 Patent," and state whether or not the machine exhibited at Manlius in October, 1863, was substantially like the drawings in said patent.

Ans. They were.

Q. 27. Have you any means of fixing the dates stated by you in your deposition?

Ans. I have. I have bills from Sweet Bros. and Co. of the knives to use in these 50 bars I described. These bills — as follows: April 25 and May 26, 1864.

Q. 28. How do you know that these bills were for the sections that went into these finger bars?

Ans. I have had them in my possession and know they were for them. They read as follows:

"SYRACUSE, N. Y., *April* 25, 1864.

K. H. C. Preston, Esq., Manlius, New York.

537 DEAR SIR: We have a load of Bramer and Phillips' bars planed and ready for delivery.

Yours truly, SWEET BROS. & CO.

B."

"SYRACUSE, N. Y., *May* 26, 1864.

Mr. K. H. C. Preston, Manlius.

DEAR SIR: Your finger bars are now ready; also all of Bramer and Phillips', and three boxes of their knives.

Yours truly, SWEET BROS. & CO."

Q. 29. How do you fix the making of this one finger bar for Frank Bramer in 1863 and the pattern of the finger late in 1862?

Ans. I fix it in relation to these bills—these bills from Sweet Bros. & Co. That is the main reliance for my memory as to dates.

Q. 30. What do you say as to when you did this work in relation to these Sweet Bros.' bills? State fully. I mean the work for Frank Bramer on this finger bar and finger pattern.

Ans. Judging it to be such a length of time prior to this work done in 1864.

Q. 31. You have stated that you built mowing machines on your own account and in connection with others. State when you built your first mowing machine.

Ans. In about 1858, in De Ruyter, N. Y.

Q. 32. What did you call this machine?

Ans. I didn't call it. It was a circular-wheel cut.

538 Q. 33. When and where did you build your second machine?

Ans. Soon after the same year. You would term it a cam machine.

Q. 34. When and where did you build your next machine?

Ans. Soon after, along in De Ruyter; a gear with stiff bar.

Q. 34½. State the next machine you built.

Ans. The next was at Manlius, in about 1860. This was called the screw power. I was in the employ of E. P. Russell.

Q. 35. You may describe this screw-power machine made in 1860, stating what kind of a machine it was, and particularly describing the drag bar and its connections with the finger bar.

Ans. It comprised the drive wheel with a series of rollers on its face working into and operating a screw sleeve on the crank shaft. The pitman had a ball-and-socket joint next to the drive wheel at that end—at and to the knife end a universal swivel. The brace bar from frame to large shoe was loose jointed, to allow vibration of the finger bar, both in line of draft and at right angles with the line of draft. The round draw bar hitched at left-hand corner of frame, and went across diagonally to the rear and under the frame, then through front of shoe through a round hole parallel with frame to rear end of shoe, passing through a vertical slot which admitted of the vibration of the finger bar or the vibration and rocking to a limited extent. I think that describes. I might say the inside wheel was a support wheel, not a drive wheel.

539 Q. 36. State what was done with the kind of machine you have just described in the way of manufacturing.

Ans. From 1861 Messrs. Russell and Tremain, of Manlius, for some six years, manufactured from 1,000 to 1,200 (I should judge). I was foreman in the shop some of the time. I superintended the making of this machine while I was there until I left, which was in November, 1861. I afterwards went back in a couple of months and worked, I should say, six months. I was pattern-maker and designer in getting up improvements.

Q. 37. State whether or not this machine was sold and used by farmers, to your knowledge.

Ans. It was.

Q. 38. You may state whether you have with you any evidences of the manufacture, sale, and use of these machines you have described in the year 1861; if so, produce.

Ans. I have (producing papers).

Q. 39. What is it you have just produced?

Ans. The Syracuse Daily Journal, of Wednesday, August 7, 1861, and the Fayetteville Gazette, of August 8, 1861.

Q. 40. What do these papers you have produced contain in reference to these mowers?

Ans. A descriptive advertisement of the screw-power machine manufactured by Russell and Tremain.

Q. 41. State whether or not the advertisement in the journal headed "To Farmers," and containing cuts of Russel's screw power and Russell's mowers and reapers, purporting to be manu-

540 factured by Russell and Tremain, and the same cut in the Fayetteville Gazette, headed "Something New," and signed Russell and Tremain, dated Manlius, June 13, 1861, and May 30, 1861, respectively, are advertisements of and cuts of these machines.

Ans. Yes, sir.

The defendants' counsel here offers in evidence the papers produced by the witness, and the same are marked "Defendants' Exhibit Journal, August 7, 1861," and "Defendants' Exhibit Gazette, August 8, 1861."

Q. 42. You may state whether or not this machine was ever patented.

Ans. It was. There were several patents in 1861, and after that there were several patents.

Q. 43. State what other improvements you made, if any, after the screw power you have just described, or on it.

Ans. I made a two-drive-wheel screw-power machine in 1861.

Q. 44. You may describe this machine, particularly the connections of the finger bar with the main frame of the machine.

Ans. The flat draw bar connected at inside front corner of frame by a ball-and-socket joint, reaching back and downward to front of large shoe, passing through an opening in the front of shoe of one-half inch by four inches and extending through that opening of four inches by four, at the rear end of opening, with pin passing perpendicularly through shoe and drag bar at front end of
541 the opening, the rear end of the shoe attached at shoe with a pin through the brace bar and shoe, other end of brace bar to the frame by ball and socket, the pitman having universal-joint connection at each end, allowing the finger bar to rock when the machine was in motion or still.

Q. 45. Have you with you a model showing this connection you have described?

Ans. I have a model showing the connection of the shoe, drag bar, and brace bar, which I produce, essentially the same, but without the ball and socket; I have a loose joint in place of ball and socket (producing model).

Defendants' counsel here offers in evidence the model produced by witness, and the same is marked "Defendants' Exhibit Preston's Model."

Q. 46. When and where did you make this machine you have last described?

Ans. At Manlius, in Woodworth and Whitney's shop, in the summer of 1861. I wish to correct the date when I left Russell's shop for a term; it was shortly before the first Bull Run battle.

Q. 47. When, with reference to this Bull Run battle, did you make this last machine?

Ans. A few weeks after. I was at Washington on patent business just after the battle. I was there about a week; then returned home and made this machine.

Q. 48. How many of these improved machines did you make?

Ans. Only one.

542 Q. 49. Why didn't you make more?

Ans. I sold out the patterns for and the right to make this machine and all patent rights I got about that time to Russell and Tremain.

Q. 50. What became of the machine that you made?

Ans. I sold it to a farmer, J. L. Pope, living near by at that time, in the town of Manlius.

Q. 51. Where does Mr. Pope live now?

Ans. Near Trumansburgh, Tompkins Co., N. Y.

Q. 52. State whether or not Mr. Pope used this machine, to your knowledge.

Ans. All the knowledge I have, he said he did.

Q. 53. What is the difference in the attachment of the draw bar in this improved screw power and in the old screw power made by Russell and Tremain?

Ans. One difference. The new one allowed of more vibration of the finger bar or rocking of the finger bar, and could put a block in the shoe either below or above the rear end of the draw bar to hold the points of the guards up or down stationary, if desired. Another difference was, the drag bar was flat and tapering and connected at the right-hand front corner in the new machine, while it was round and connected at the left-hand front corner in the first machine. Essentially the operation was the same, excepting the blocking up and down in the new machine.

Cross-examination by Mr. BANNING:

X Q. 1. This model that you have produced was made by you?

Ans. Yes, sir.

543 X Q. 2. It was made entirely from memory, was it not?

Ans. Yes, sir; it was not entirely from my own memory, but from Mr. J. L. Pope's description, without my prompting.

X Q. 3. You did not have the machine in 1861, or any drawing, picture, or model of that machine, to assist you?

Ans. I did not.

X Q. 4. Was that new machine also patented?

Ans. The screw and roller part were patented and a guard on the same machine.

X Q. 5. Those were the only features that were new over the old screw-power machine that you had already made?

Ans. They were, and being a two-wheeled machine.

X Q. 6. You say that several patents were obtained to cover your improvements contained in these screw-power machines?

Ans. There was.

X Q. 7. What years were these patents obtained?

Ans. The first were in 1861, and the last several — afterwards; I couldn't be definite.

X Q. 8. Were these patents applied for in your name?

Ans. The one of Dec. 17, 1861, was in my name; assignor to E. P. Russell. E. P. Russell was Nov. 12, 1861. The guard patent I don't have the month of; it was in 1861. That was in my name.

544 X Q. 9. Were not all of the applications made in your name, and then assignments made afterwards? In these cases you made assignments?

Ans. They were all embraced in a general assignment.

X Q. 10. There was some controversy between yourself and Russell, was there not?

Ans. Yes, sir.

X Q. 11. How long was the inner shoe in these screw-power machines?

Ans. From the rear edge to the front edge they were about 15 to 18 inches.

X Q. 12. How long was the slot which you have described as being four inches square at its rear end?

Ans. About five inches.

X Q. 13. This inner shoe slid on the ground when the machine was in operation, did it?

Ans. Yes, sir.

X Q. 14. How long was the drag bar from the front end of the shoe, where it entered the slot, to the ball-and-socket joint which connected it to the front right-hand corner of the machine?

Ans. About two feet six inches. That would make it about three feet the whole length.

X Q. 15. What material was the frame?

Ans. Wood bolted together.

X Q. 16. What supported that frame?

Ans. The axle between or reaching from the drive wheels each side and the pole extending to the neck yoke.

X Q. 17. What supported the outer end of the finger bar?

545 Ans. There was a small wheel in the outer shoe.

X Q. 18. How high from the ground was the front end of the frame when the machine was in operation?

Ans. About twenty inches.

X Q. 19. Do you have any writings or memorandum to enable you to say that the work which you did for Frank Bramer in making finger patterns was in 1862?

Ans. I have these bills from Sweet Bros. & Co.

X Q. 20. You have nothing except these bills to refresh your mind as to the time when you made these finger patterns for Bramer?

Ans. I have something besides.

X Q. 21. What is it?

Ans. It is a bond from Russell and Tremain, dated in 1861.

X Q. 22. You have no book showing charges against Frank Bramer for work done for him in 1862, have you?

Ans. I had a book, an account book, but lost it in moving from Manlius here.

X Q. 23. In the absence of your account book showing your transactions during these years and in view of the great lapse of time, do you wish to swear positively that you made the patterns for the fingers for Frank Bramer in the year 1862 and not 1863?

Ans. Positive, as to my best recollection, with these helps to my recollection as to dates.

X Q. 24. These fingers are also called guards or points, are they not?

Ans. I never heard them called points, but guards or fingers.

546 X Q. 25. They come to a sharp point, do they not?

Ans. Yes; at the front end.

X Q. 26. Did Bramer tell you anything about the kind of mowing machine he was making these fingers for, of which you made the pattern?

Ans. I think he did.

X Q. 27. What kind of a machine did he tell you he intended these fingers for?

Ans. A two-wheeled tub or planetary gear hinged bar. I don't remember anything further.

X Q. 28. Did he say whether they were intended for an iron-frame or a wooden-frame machine?

Ans. No; he did not.

X Q. 29. Did you know what kind of a frame the machine was to have for which he desired these fingers?

Ans. No, sir.

X Q. 30. Do you know of his having an iron frame cast?

Ans. Yes; I remember of his having an iron frame at Woodworth and Whitney's foundry.

X Q. 31. Since you have recalled his having an iron frame cast, can you tell the kind of machine he intended the fingers for of which you made the patterns?

Ans. I couldn't remember distinctly.

X Q. 32. Were not these fingers used on that iron frame, and did you not see them on it at the Manlius fair?

Ans. Yes, sir.

X Q. 33. In your direct examination you were uncertain as to whether this machine at the Manlius fair had the fingers of
547 which you made the patterns; after thus recalling the various circumstances has not that doubt disappeared?

Ans. I think my testimony was that they were on that machine.

X Q. 34. As I understand it, there was only one machine made like this screw-power machine sold to Pope?

Ans. That was the only one.

Redirect examination by Mr. TALCOTT:

R. D. Q. 1. What was this bond spoken of by you in your cross-examination; when was it dated?

Ans. Dated November 29, 1861. It was a bond of indemnity given me by Russell and Tremain. In buying me out they gave me real estate and a bond. This is the bond.

R. D. Q. 2. And you have produced this bond to the notary and it is dated Nov. 29, 1861, is it?

Ans. Yes, sir.

R. D. Q. 3. Now, how does this bond assist you in fixing the date of the first work you did for Frank Bramer on mowing machines?

Ans. It was a year from that time that I began making guard patterns for Frank Bramer. Now, my impression from conversations with Bramer, his being to my shop every few days, is that in the fore part of 1862 he was to work on a mowing machine with a wood frame, and then, late in that season towards winter, he brought his patterns to the shop and had this cast frame made.

Recross-examination by Mr. BANNING:

548 R. X. Q. 1. You cannot swear that these impressions that you have given above are according to the actual facts?

Ans. Of course I didn't see any machine; I got this from his talk.

R. X. Q. 2. Will you swear positively and without qualification that in 1862 Frank Bramer told you he was at work on a mowing machine?

Ans. I couldn't, only from my best recollection.

K. H. C. PRESTON.

STATE OF NEW YORK, }
County of Onondaga, } ss:

I, Charles H. Wheaton, a notary public in and for the said county, in the State aforesaid, hereby certify that all the proceedings aforesaid were had as stated; that the witnesses, Orsemus G. Stillman, Lewis Bramer, John J. Howe, Spafford Allen, Benjamin W. Bramer, Alvah Woodworth, J. Wilson Howe, Wm. W. Candee, Hiram McClure, Chas. W. H. Wood, Stephen Cheney, Augusta Bramer, Nellie B. Smith, King H. C. Preston, were by me first duly sworn to testify the truth, the whole truth, and nothing but the truth in the cause named in the caption hereto, and that their depositions were taken down by me from their answers to the questions put to them respectively, and the same were read over to and subscribed by them as and for their depositions in said cause. The oath at the end of the depositions was waived by counsel.

I further certify that I am not of counsel for or related to either of said parties or interested in said cause.

In testimony whereof I have hereunto set my hand and seal this 14th day of June, 1887.

Fees, $70.00, paid by the defendants' solicitors.

[SEAL.] C. H. WHEATON,
Notary Public, Onondaga Co., N. Y.

549 United States Circuit Court, Northern District of Illinois. In Equity.

ALVARO B. GRAHAM *et al.*
vs.
THE PLANO MANUFACTURING COMPANY *et al.*

Testimony taken on the part of the defendants, pursuant to notice, before James B. Emery, a justice of the peace, at Trumansburgh, New York, June 15, 1887, it being agreed that a justice instead of a notary may act.

Present: Thomas A. Banning, Esq., of counsel for complainants, and H. H. Talcott, Esq., representing Coburn & Thacher, counsel for defendants.

JACOB L. POPE, a witness produced, sworn, and examined on the part of the defendants, deposes and testifies as follows in answer to questions by Mr. TALCOTT:

Q. 1. State your name, age, residence, and occupation.

Ans. Jacob L. Pope; age, about 62; near Trumansburgh, New York; and occupation, a farmer.

X Q. 8. Where was the wedge generally?

Ans. When not in use it was carried in the box of the machine.

X Q. 9. Did you not have the Preston model shown you before you described the machine you first got from Preston in this deposition?

Ans. Yes, sir.

X Q. 10. Was not that model on the table before you as you described the machine?

Ans. It was.

X Q. 11. How wide was the draw bar of that first Preston machine?

Ans. I should guess about three or four inches where it first entered the shoe.

X Q. 12. How thick was it?

554 Ans. I should judge a half an inch.

X Q. 13. How long was it from the front end of the shoe to where it was attached to the frame?

Ans. I should judge about three feet and a half—perhaps four feet.

X Q. 14. How long was the slot in the shoe from its front to its rear end?

Ans. Five or six inches, I should judge.

X Q. 15. How much in front of the points of the guards, if any, did the front of the shoe where the draw bar entered extend?

Ans. I think the rear end of the slot was about on a line with the points of the guards.

X Q. 15½. Was it not on a line with the finger bar?

Ans. I think not.

X Q. 16. You have nothing but your memory to rely upon in describing this machine and its various parts, have you?

Ans. No, sir; nothing else.

X Q. 17. How high was the front of the frame from the ground where the draw bar was attached?

Ans. About eighteen inches—perhaps twenty.

X Q. 18. Who did you sell this machine to after you broke it up for old iron?

Ans. I think my children sold it to a rag-peddler.

X Q. 19. Have you no portion of it left?

Ans. No portion of it.

X Q. 20. Did you ever see another machine just like this one you first bought from Preston?

Ans. I never did.

555 X Q. 21. Did not Russell and Tremain, at Manlius, manufacture screw-power machines like the one you bought from Preston, so far as the attachment of the shoe to the frame is concerned?

Ans. No, sir; not to my knowledge.

X Q. 22. In what way do they differ?

Ans. They had no means of raising and lowering the points of the guards.

X Q. 23. What particular thing did they lack?

Ans. The shoe was rigid upon the bar.

X Q. 24. How do you know that?

Ans. I have used his machine?

X Q. 25. Did you know Mr. Cheney, at Russell and Tremain's works?

Ans. Yes, sir.

X Q. 26. If he has testified that the shoe was slotted and did permit the guards to rise and fall, what would you say as to his testimony?

Ans. I don't know as I should have anything to say.

X Q. 27. Would you say that he was certainly mistaken?

Ans. I should think he was.

X Q. 28. If Mr. Preston has also testified that the shoe was slotted in the Russell and Tremain machines and permitted the guards to rise and fall, what would you say as to his testimony?

Ans. I should think he was mistaken.

X Q. 29. Those screw-power machines have all gone out of use, as you understand it, have they not?

Ans. Yes, sir.

X Q. 30. Were they not a heavy, clumsy machine?

556 Ans. Not compared with other machines at that period. I did not consider them so.

X Q. 31. Were they not as compared with the machine built by Frank Bramer, at Fabius?

Ans. I don't think mine was.

X Q. 32. What supported the outer end of the finger bar in the first Preston machine you bought?

Ans. A roller wheel; I will not be certain whether it was a wheel or a shoe. My impression is that it was a wheel.

Redirect examination by Mr. TALCOTT:

R. D. Q. 1. How would the finger bar operate in the first Preston machine that you bought—in uneven ground when the wedge was left out?

Ans. It would conform to the irregularities of the surface somewhat.

JACOB L. POPE.

577 STATE OF NEW YORK, *County of Tompkins,* } ss:

I, J. R. Emery, a justice of the peace in and for the county of Tompkins, in the State aforesaid, hereby certify that all the proceedings aforesaid was had as stated; that the witness, Jacob L. Pope, was by me first duly sworn to testify the truth, the whole truth, and nothing but the truth in the cases named in the caption hereto, and that this deposition was taken down in my presence from his answers to the questions put to him, and the same read over to and subscribed by him as and for his deposition in said cause; and oath at the end of the deposition being waived by counsel.

I further certify that I am not counsel or related to either of said parties or interested in said cause.

In witness whereof I have hereunto set my hand this fifteenth day of June.

J. R. EMERY,
Justice of the Peace.

558 *Notice.*

United States Circuit Court, Northern District of Illinois. In Equity.

ALVARO B. GRAHAM *et al.*
vs.
THE PLANO MANUFACTURING COMPANY *et al.*

To Messrs. Banning & Banning, solicitors for complainants:

Please to take notice that on Monday, the 20th day of June, A. D. 1887, at 10 o'clock a. m., we shall proceed to take testimony on behalf of defendants, to be used upon the hearing of the above-entitled cause, at our office, 52 to 59 Ashland block, Chicago, Ills., before William H. Richardson, a notary public, or other competent officer.

The taking of testimony will continue from day to day until completed.

You are invited to be present and cross-examine.

Chicago, Ills., June 18, 1887.

COBURN & THACHER,
Solicitors for Defendants.

Service of above notice, by copy, acknowledged this 18th day of June, A. D. 1887.

BANNING & BANNING,
Solicitors for Complainants.

559 United States Circuit Court, Northern District of Illinois. In Equity.

ALVARO GRAHAM and HUGH GRAHAM
vs.
THE PLANO MANUFACTURING COMPANY *et al.*

Pursuant to notice hereto attached, met at offices of Coburn & Thacher, Nos. 52 to 59 Ashland block, Chicago, Ills., this 20th day of June, A. D. 1885, to take testimony on behalf of the defendants.

Present: John M. Thacher, Esq., of Coburn & Thacher, on the part of defendants, and Thomas A. Banning, Esq., on the part of complainants.

Whereupon the following proceedings were had:

WILLIAM H. JONES, the first witness produced on behalf of the defendants, being first duly sworn, deposes and says, in answer to interrogatories propounded to him by JOHN M. THACHER, counsel for defendants:

Q. 1. What is your name, age, residence, and occupation?

Ans. William H. Jones; age, 42; residence, Evanston, Ills.; occupation, president of the Plano Manufacturing Company.

560 Q. 2. How long have you been president of the Plano Manufacturing Company?

Ans. Since their organization in the spring of 1881.

Q. 3. Please state whether this company ever obtained a license from Frank Bramer to manufacture mowing machines under certain patents granted to Bramer.

Ans. Yes.

Complainants' counsel objects to all testimony in relation to this license or arrangement with Frank Bramer as being irrelevant and immaterial to the issues therein, and for the further reason that it is incompetent at this stage of the proceedings, the time for the introduction of such evidence, if admissible at any time, being when the evidence for the defence was originally taken, the court having opened the case for no such purpose as the taking of this evidence.

Q. 4. Who negotiated that license for the Plano Company?

Ans. I did.

Q. 5. Have you the license with you, and will you produce it that it may be offered in evidence?

Ans. Yes; and I here produce it.

Counsel for defendants here offers in evidence the license produced by the witness, and the same is marked "Defendants' Exhibit Bramer License."

561 Q. 6. How well acquainted with Frank Bramer were you?

Ans. I was very well acquainted with him.

Q. 7. Did he ever make any statement to you about the settlement made by the Warrior Mower Company of Little Falls, N. Y., with A. B. Graham or the owners of the Graham patent in suit for the alleged infringement of that patent?

Ans. Yes.

Q. 8. Did he say anything as to his own advice and wishes in that matter; if so, what?

Ans. Yes; he said to me that the settlement was made against his advice and wishes. The reason he gave was that the president of the company was an old man and did not wish to be bothered with any litigation, and he advised the undersigned never to make any settlement with Banning & Banning if they should commence suit against us.

Q. 9. Who was the old gentleman referred to as president of the Warrior Company, if you know?

Ans. I think his name was Loomis; that is my recollection.

Q. 10. When and where did Mr. Frank Bramer make this statement to you about the said settlement; if more than once, at what times and places?

Ans. Yes; several times; once here in Chicago, in October, 1881; also about ten days later at Utica, N. Y.

Q. 11. Did you know anything about the relations between Frank

Bramer and the president and some other prominent men
562 in the Little Falls Warrior Mower Company at that time? If so, state whether they were friendly or not.

Ans. I know by what Mr. Bramer told me many times that they were not friendly; that there was a good deal of bitter feeling between them.

Without waiving the objection above, Mr. BANNING cross-examined as follows:

X Q. 12. Was this license with Bramer made the 29th day of April, 1881, the day mentioned as that on which it was signed?

Ans. To the best of my knowledge and belief it was. I made it right there at Little Falls with him.

X Q. 13. This license provides for the payment of $3 a mowing machine. What feature in the mowing machine was it that you were willing to pay $3 a machine for?

Ans. The whole machine as they made it and as they furnished us with patterns to make them at Plano.

X Q. 14. What particular feature in that machine did you regard as of chief importance when you made that agreement?

Ans. No particular feature; we wanted the machine to build.

X Q. 15. What particular features or characteristics were in that machine that made you want to build it?

Ans. First, because I had sold their old Warrior mowers for a number of years and they had given fair satisfaction, and as Mr. Bramer considered the New Warrior better than the old and cheaper to build.

X Q. 16. Was there any special difference between the New Warrior and the old?

563 Ans. Yes.

X Q. 17. State what it was.

Ans. I don't know of anything but the wheels that were exactly the same in the two machines.

X Q. 18. The general principles and mode of operation of the two machines were substantially the same, were they not?

Ans. I did not consider them so.

X Q. 19. Name some difference in mechanical construction between the two machines which effected the mode of operation.

Ans. I am not a mechanic and can't give you any more than I have already done on that point.

X Q. 20. How soon after this contract was made did you get machines constructed under it and onto the market?

Ans. We made some in the fall of 1881, but all for the season of 1882.

X Q. 21. How were these New Warriors received by your customers; were they liked or not?

Ans. In some localities they were liked; in others they were not.

X Q. 22. At the time you made this contract with Bramer you knew of the Graham patent, and that the Warrior Mower Company of Little Falls, N. Y., had paid $12,000 under it, did you not?

Ans. No.

X Q. 23. You knew of the patent, did you not?

Ans. No; I never had anything to do with patents.

X Q. 24. Had you never heard of the patent?

564 Ans. I don't recollect of hearing of it till Mr. Bramer told me about it in October, 1881.

X Q. 25. After this suit was brought against you by Graham, did you continue to pay Bramer the license fee mentioned in this contract with him?

Ans. No; but I called on Mr. Bramer, in New York, to have the matter all fixed up with him, but as he was very nervous his wife asked me not to mention anything about it to him.

X Q. 26. Your ceasing to make payments under this license was because of this suit, was it?

Ans. We did pay and make a settlement in full.

X Q. 27. That was about two years ago that you made this settlement in full, was it not?

Ans. Yes; two years ago the 11th day of last April.

X Q. 28. That was April, 1885, was it?

Ans. Yes.

X Q. 29. Did you not, in that settlement, secure a reduction from the royalty mentioned in this contract on account of the pendency of this suit?

Ans. No.

X Q. 30. There was a reduction, was there not?

Ans. Yes.

X Q. 31. And that settlement was made after you had been sued by Frank Bramer's estate, was it not?

Ans. No; not that I know of.

X Q. 32. When did you see Frank Bramer in New York?

Ans. Late in the fall of 1883.

WM. H. JONES.

565 Subscribed and sworn to before me this 20th day of June, 1887.

[SEAL.] W. H. RICHARDSON,
Notary Public.

STATE OF ILLINOIS, }
County of Cook, } ss:

I, William H. Richardson, a notary public in and for the county of Cook, in the State aforesaid, do hereby certify that the foregoing deposition of William H. Jones was taken before me at the time and place therein specified; that the parties to the said cause were present at the taking of the same, complainants by their counsel, Thomas A. Banning, of Banning & Banning, and defendants by their counsel, John M. Thacher, of Coburn & Thacher, as therein appears; that before deposing the said William H. Jones was by me duly sworn to tell the truth, the whole truth, and nothing but the truth in the cause aforesaid; that his deposition was reduced to writing from his respective statements and the same duly subscribed and sworn to before me, as therein appears.

And I do further certify that I am neither attorney nor of counsel for any of the parties in said deposition or caption named and am in nowise interested in the result of said cause.

In testimony whereof I have hereunto set my hand and affixed my seal this 20th day of June, A. D. 1887.

[SEAL.] WM. H. RICHARDSON,
Notary Public.

(Here follow diagrams marked pp. 566, 567, 568, & 569.)

570 UNITED STATES PATENT OFFICE.

ALVARO B. GRAHAM, of Waukegan, Illinois.

Improvement in Harvesters.

Specification forming part of Letters Patent No. 74342, dated February 11, 1868.

To all whom it may concern:

Be it known that I, Alvaro B. Graham, of Waukegan, in the city of Lake and State of Illinois, have invented certain new and useful improvements in harvesters for reaping and mowing, and that the following is a full, clear, and exact description of my invention.

The objects of the improvements which constitute the invention set forth in this patent are to obtain a greater capacity of movement in a floating finger-beam, while retaining its connection with a gearing-carriage, that is drawn forward by a stiff tongue; to facilitate the raising and lowering of the finger-beam; to improve the operation of the cutting apparatus; and to transmit motion from the gearing-carriage to a reel connected with a finger-beam, that rises and falls independently of the gearing-carriage.

To these ends the first of my improvements consists of the combination of the finger-beam with the gearing-carriage by means of a vibratable link extending crosswise to the line of draft, a draft-rod extending parallel with the line of draft, and two swivel-joints, the one for the vibratable link, and the other for the draft-rod, so that the finger-beam can rise and fall at either end, and rock forward or backward independently of the gearing-carriage, while maintaining its connection with it.

My next improvement consists of the combination of the finger-beam, gearing-carriage, vibratable link, draft-rod, and swivel-joints, with an arm connected with the finger-beam, to enable it to be rocked for the purpose of setting its guard-fingers at any desirable inclination to a horizontal line.

My next improvement consists of the combination of the gearing-carriage, rocking finger beam, and reciprocating cutter, with a crank-shaft on the gearing-carriage for driving the cutter, a connecting-rod extending between the crank-wrist of the said crank-shaft and the cutter, and a swivel-joint at the cutter for the connecting-

4 Sheets—Sheet 4

A. B. GRAHAM.

HARVESTER.

No. 74,342. Patented Feb. 11, 1868.

No 1044.
Plano Mfg Co
v.
Graham et al.
p. 566

Fig. 7.

Fig. 6.

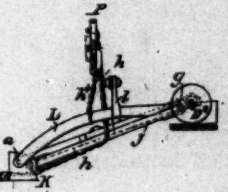

Fig. 8.

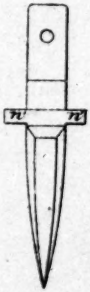

Fig. 9.

Fig. 11.

Fig. 12.

Fig. 10.

Witnesses:
F. W. Wurster
R. J. Cunningham

Inventor.
A. B. Graham
by his Attorney
E. S. Renwick

4 Sheets—Sheet 3.

A. B. GRAHAM.

HARVESTER.

No. 74,342. Patented Feb. 11, 1868.

No 1044.
Plano Mfg. Co.
v
Graham et al.
p. 567

Fig. 4.

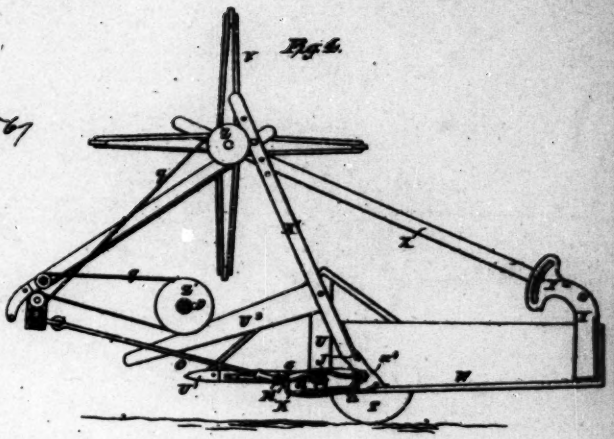

Fig. 5.

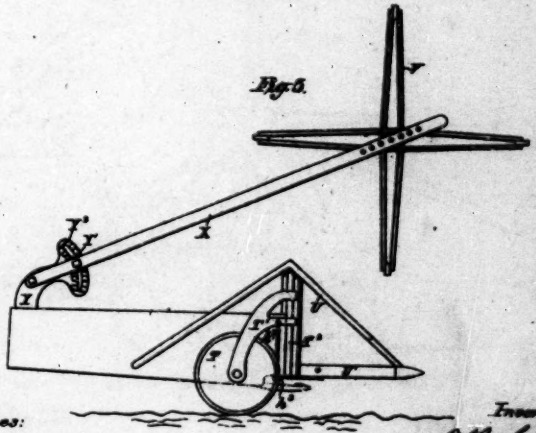

Witnesses:
F. W. Kurster
R. J. Cunningham

Inventor:
A. B. Graham
by his Attorney
E. F. Renwick

4 Sheets—Sheet 2.

A. B. GRAHAM.

HARVESTER.

No. 74,342. Patented Feb. 11, 1868.

No 1044
Plano Mfg. Co } p. 368
Graham et al.

Fig. 2.

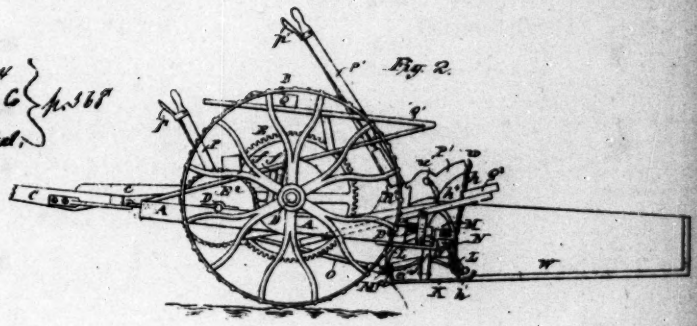

Fig. 3.a

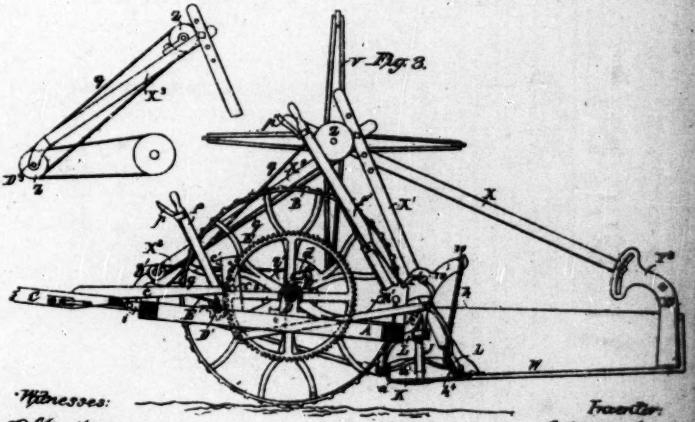

Fig. 3.

Witnesses:
[illegible]
[illegible]

Inventor:
A. B. Graham
by his attorney
[illegible]

No. 1044.
Plaus Mfg. Co
v
Grahamstal } p. 569

569

4 Sheets—Sheet 1

A. B. GRAHAM.

HARVESTER.

No. 74.342. Patented Feb. 11, 1868.

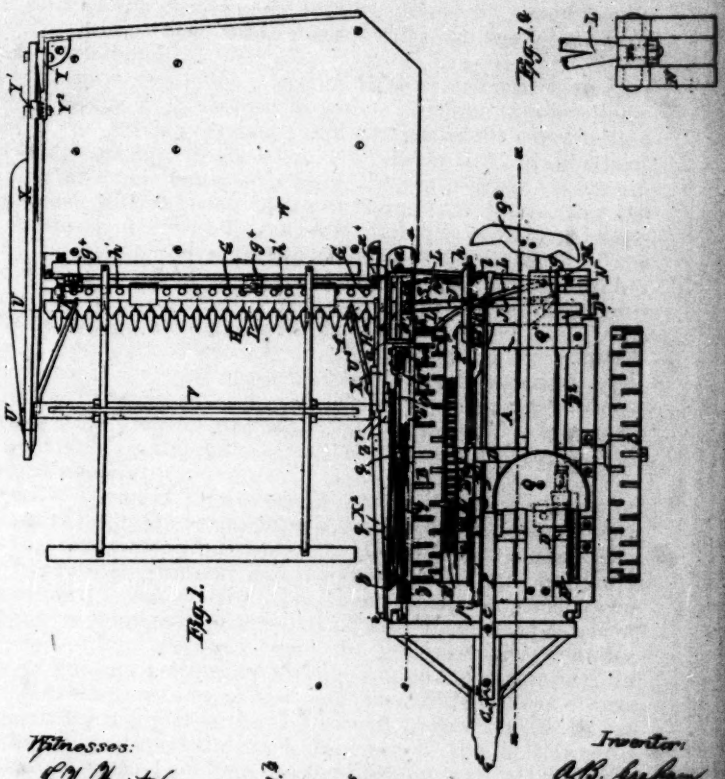

Fig. 1.

Fig. 1a

Fig. 1b

Witnesses:
F. W. Wurster
R. J. Cunningham

Inventor:
A. B. Graham
by his Attorney
E. S. Renwick

rod, so that the connection between the crank-wrist on the gearing-carriage and the cutter on the finger-beam does not obstruct the rocking of the finger-beam.

My next improvement has reference, specially, to the raising of the grain end of a finger-beam, which is connected with the gearing-carriage by a vibratable link; and consists of the combination of the gearing-carriage, the finger-beam, and the vibratable link (that connects the two, while permitting the finger-beam to move independently of the carriage) with a grain-wheel that is movable in a vertical direction relatively to the finger-beam, and with a lifting-connection extending from the bearing of the said wheel to the gearing-carriage, so that by operating upon said lifting-connection the grain end of the finger-beam may be raised or lowered relatively to the grain-wheel, and, consequently, to the ground on which that wheel runs.

My next improvement has reference to the raising of both ends of the finger-beam in a machine in which it is free to move independently of the gearing-carriage; and consists of the combination of the gearing-carriage, finger-beam, vibratable link, grain-wheel, and lifting-connection, extending from the grain-wheel, as hereinbefore specified, with a lifting chain or connection connecting the inner or stubble end of the finger-beam with the gearing-carriage, so that by operating the said two connections both ends of the finger-beam may be raised or lowered; or by operating one or other of the said two connections the corresponding end of the finger-beam may be raised or lowered without the other.

My next improvement consists of the combination of a lifting-lever upon the gearing-carriage with the lifting-connections, connected with the finger-beam and grain-wheel, by means of V-formed notches, that permit the lengths of the said connections to be readily adjusted by changing the links of the chains that are engaged in said V-formed notches.

The object of the next improvement is to prevent the casting off of the belt that imparts motion from a shaft upon the gearing-carriage to a reel that moves independently thereof, when the machine is passing over rough ground; and it consists of the combination of the reel, arranged to move with the finger-beam, the gearing-carriage, a radius-bar connecting the reel-shaft with the gearing-carriage, a guiding belt-pulley arranged upon the gearing-carriage, and a second guiding belt-pulley arranged upon the radius-bar. In
571 this combination one of the said two guide-pulleys directs the driving member of the belt into its proper line, while the other guide-pulley directs the slack member of the belt into its proper line, so that the belt does not tend to cast itself off the driving-pulley or the reel-pulley.

The object of the next improvement is to insure the free rocking of the finger-beam for the purpose of raising or depressing the points of the guard-finger, when the machine is used for reaping grain; and consists of the combination of the finger-beam with the gearing-carriage by a swivel-joint, and with the raking platform by hinge-connections, so that the finger-beam may be rocked relatively

to both the gearing-carriage and the raking-platform, with which it is connected.

The object of the next improvement is to maintain the raking-platform at its proper inclination or level, notwithstanding the rocking of the finger-beam, with which it is connected; and it consists of the combination of the raking-platform of the machine with the finger-beam by hinge-connections, and with the gearing-carriage by an upright stay, and a bar or link connecting the gearing-carriage and the upper end of said stay. The upright stay forming a part of this combination is, by preference, the inner reel-post, and the bar or link is, by preference, the radius-bar, that also connects the reel with the gearing-carriage, so that the said reel-post and radius-bar are enabled to perform duplex functions.

The object of my next improvement is to insure the free rocking of the finger-beam relatively to the raking-platform, notwithstanding the support of the outer ends of the finger-beam and platform by a grain-wheel; and it consists of the combination of the finger-beam with the grain-wheel, through the intervention of a hinge-connection, which is, by preference, one of the same hinge-connections which combines the raking-platform with the finger-beam, and the grain-wheel is, by preference, a caster-wheel.

The object of my next improvement is to enable the clutch-connection between the crank of the cutter and the driving-wheel to be operated with facility; and consists of the combination of the movable member of the clutch with the clutch-lever, composed of two parts, which are a lever proper and a yoke that engages in a groove in the said movable member.

My improvements may be embodied in a machine having the finger-beam arranged in advance of the axial line of the shaft or arbor of the driving-wheel, or arranged in the rear of that axial line. In the former case the vibratable link that connects the finger-beam with the gearing-carriage will be arranged in advance of the driving-wheel, and in the latter case in the rear of the driving-wheel. In the former case also the rod hereinbefore called a "draft-rod" (because the strain to which it is subjected is a pulling-strain) becomes a pushing or thrust rod, and connects the inner end of the finger-beam with the rear of the gearing-carriage. In the former case the radius-bar for the reel and raking-platform connects with the rear end of the gearing-carriage, and in the latter case with its front end.

I prefer to construct a harvesting-machine with the finger-beam in the rear of the line of the axle of the driving-wheel, and as a description of such a machine, perfected by my improvement, will enable them to be fully understood, all of my improvements are embodied in the harvesting-machine of that description, which is represented in the accompanying drawings, and which is an illustration of the best mode which I have thus far devised of embodying them in a working-machine.

Figure 1 represents a plan of the machine. Fig. 2 represents an elevation of the stubble side thereof. Fig. 3 represents a vertical transverse section thereof at the line *x x* of Fig. 1. Fig. 4 repre-

sents a similar section at the line * * of Fig. 1. Fig. 5 represents an elevation of the grain side of the machine. Fig. 6 represents a front view of certain parts of the machine, designated by the same letters as are applied to the same parts in the other figures. Fig. 7 represents a plan of a part of the finger-beam with the divider used in mowing, and the platform and grain-divider disconnected; and Figs. 8, 9, and 10 represent a plan and side view and cross-section of the guard-fingers drawn upon a larger scale than the preceding figures; and Figs. 11 and 12 represent views of the clutch-lever of the crank-shaft, also drawn upon a larger scale.

This machine is what is commonly called a "combined machine," and is adapted to reaping and mowing. When used for the former purpose it is arranged as represented in Figs. 1 to 6; when used for the latter purpose certain of its parts are removed, as hereinafter stated, and a grass-divider is substituted for the grain-divider at the outer end of the finger-beam.

The gearing which imparts motion to the sickle and reel of the machine is mounted upon a carriage, A, which is supported by two running or ground wheels, B B, and is provided with a tongue, C, to which the horses are hitched. The tongue is jointed to the gearing-carriage, and has an arm, c, which projects backward over said carriage to a standard, c^1, mounted thereon. The standard and arm are both pierced with holes, through which a bolt, c^2, is passed, by which the tongue is made fast, so that the tongue is then a stiff tongue; but the inclination of the tongue to the carriage may be varied by shifting the said bolt from one hole to another in the standard c^1, so as to vary the position of the rear end of the carriage with which the cutting apparatus is connected.

The running-wheels B B, by their revolution, impart motion to the cutter and reel of the machine. To this end they are fitted to
572 turn upon a shaft, D, with which each is connected by a spring-pawl, d, and a ratchet-wheel, d' (the latter secured to the shaft and the former to the running-wheel), so that the running-wheel that turns fastest acts as the driver. This shaft is fitted with a cog-wheel, E, whose teeth engage with those of a pinion, E^1, secured to a counter-shaft, D^1, and this counter-shaft is fitted with a beveled wheel, E^2, whose teeth engage with those of a beveled pinion, E^3 (represented in dotted lines in Fig. 1), that is mounted upon the crank-shaft D^2, with which the cutter is connected. The hub of the pinion E^3 is fitted to turn upon the crank-shaft D^2, and is connected with it by means of a saw-toothed clutch, one member (e) of which is arranged to slide longitudinally upon the crank-shaft, but compelled to turn therewith by means of a pin or feather, while the other member of the clutch is formed upon the hub of the pinion E^3. The sliding-clutch member e is controlled by a lever, f, which is composed (see Figs. 11 and 12) of two parts, the lever proper and a yoke, f^3, which enters a groove in the sliding-clutch member e, and is pivoted to the frame of the machine, with its upper end passing through a slotted plate, f^1, fitted with two notches, in one or other of which the lever may be engaged for the purpose of holding the clutch into gear or out of gear. In the former case the crank-shaft

D^2 and the cutter are caused to operate as the running-wheels turn. In the latter case the crank-shaft and cutter, being disconnected from the running wheels, remain at rest. The requisite lateral play of the lever to permit its engagement and disengagement is obtained by constructing it to fit loosely upon its pivot, and a spring, f^2, is coiled upon the pivot to hold the lever engaged in either notch of the slotted plate f^1. The two parts of the clutch-lever are notched and fit loosely into one another; hence the yoke can play upon the lever proper to accommodate itself to the varying positions of the lever proper and sliding-clutch member.

The finger-beam G of the machine projects at one side of the rear end of the gearing-carriage A, and is fitted with guard-fingers H, through the slots of which a scalloped cutter, I, is arranged to reciprocate endwise. The end of this cutter that is nearest the gearing carriage is connected with the crank-wrist *g* of the crank-shaft D^2 by means of a connecting-rod J. The finger-beam is connected with the rear end of the gearing-carriage in the following manner: The end of the beam nearer the carriage is provided with a shoe, K, from which lugs *a a* project upward. These lugs are perforated to admit a joint-bolt, a^1, which connects the shoe with one end of a vibratable forked link, L, whose other end is connected by a swivel-joint, M, with a bracket, N, secured to the rear of the gearing-carriage. This swivel-joint is formed by a cross-head (*m*, Fig. 1ª), the center of which is bored transversely to permit a journal formed on the end of the forked link L to turn in it. The ends of the cross-head *m* are formed into journals, which turn in bearings upon the bracket N. Hence the finger-beam can both rise and fall freely at either end, and rock forward and backward without twisting the link that forms its connection with the gearing-carriage. Moreover, the axis of the cross-head *m* of the swivel-joint is arranged in line, or thereabout, with the axis of the crank-shaft D^2, that imparts motion to the cutter, so that such rising and falling, or rocking, does not materially change the distance between the crank-shaft and the cutter. The shoe K of the finger-beam is connected also with the front end of the gearing-carriage by a draft-rod, O, and the connection between the rear end of this draft-rod and the said shoe is a swivel-joint, M′, of which the joint-pin a^1 of the vibratable link L is the longitudinal axis, and its T-head m^1 the horizontal axis. This swivel-joint, therefore, while maintaining a firm connection with the draft-rod, gives free play for both the longitudinal and rocking movements of the finger-beam. Hence, when the machine is used for cutting grass the said finger-beam may be left free, not only to rise and fall at either end, but also to rock or to be rocked forward and backward, so that the points of its guard-fingers incline toward or from a horizontal plane.

In order that the finger-beam may be rocked by the conductor of the machine, the vibratable link L is fitted with an arm, *l*, whose upper end is connected by a rod with the lower end of a lever, P, that is pivoted to the gearing-carriage near its forward end. The upper end of this lever P extends within the reach of the driver, who sits upon the driver's seat Q, so that he may rock the finger-

beam by moving the said lever to and fro. This rocking lever P is fitted with a spring-bolt, whose end can engage in any one of a number of notches formed in a segment, R, which is attached to the gearing-carriage concentrically with the pivot of the rocking lever, so that the finger-beam may be fastened in the desired position by the engagement of the spring-bolt in the appropriate notch. The rocking lever is fitted with a lever-handle, *p*, and rod connecting with the spring-bolt, by which the spring-bolt may be withdrawn from the notched segment and held disengaged therefrom during the movement of the lever. In order that the connection between the cutter on the finger-beam and the crank-shaft on the gearing-carriage may not obstruct the free rocking of the finger-beam, the connecting-rod J is connected with the cutter I by means of a swivel-joint, S, consisting (see Fig. 1[3]) of a head, *s*, that is pivoted to the cutter-stock (by a shank that extends lengthwise therewith, and turns in an ear, s^1, secured to the end of the cutter-stock), and of a cross-pivot, s^2, that passes through the said head and through two ears formed upon the connecting-rod J.

573 The outer end of the finger-beam is sustained by a grain-wheel, T, which is pivoted to an arm, T^1, that projects from and is constructed to turn upon an upright arbor, T^2, so that the said grain-wheel operates as a caster-wheel. This arbor T^2 is secured to the frame-work T of the divider U^1.

In order that the finger-beam may be raised and lowered while the machine is in operation, the arbor T^2 of the caster-wheel is constructed to slide up and down in the hubs of the caster-arm T^1, and the said arm is connected with the shorter arm of a bent hand-lever, P′, that is pivoted upon the gearing-carriage by a flexible connection consisting of a chain, *h*, rod h^1, and a cord, h^2, the first of which passes around a sheave mounted upon the vibratable link L, and the last of which passes around a sheave, h^3, secured in the divider frame-work U, so that the forward movement of the bent hand-lever or lifting-lever P′ pulls the divider end of the finger-beam upward, and causes it to approach the hub of the caster-wheel arm T^1, thereby compelling it to rise from the ground.

In order that the inner end of the finger-beam may be correspondingly raised, the vibratable link L is provided with a chain, h^4, which is applied to the same lifting-lever P′ as the chain leading from the outer end of the platform, and as this second chain is attached to the link near its middle, so that the finger-beam is raised twice as much as the part of the link at which the attachment is made, the chain is applied to the middle of the bent arm of the lifting-lever.

In order that the chains may be adjusted so as to vary the position of the finger-beam from any required mean distance from the ground, they are not made fast to the lifting-lever, but are caught in V-formed notches *w w′*, from which they can readily be removed and be as readily replaced. The lifting-lever is provided with a spring-bolt, which is arranged to engage in any one of a series of notches formed in a segment-plate, R′, so as to secure the lifting-lever, and consequently the finger-beam G with which it is con-

nected, in any desired position. A lever-handle, p', also is applied to the lifting-lever to control the spring-bolt.

The guard-fingers H have a peculiar form, the upper faces of their lower members being made concave, as represented at n, Fig. 10. This construction permits the cutter or sickle to bear on the rims of the fingers, the edges of which are kept sharp by the constant attrition, so that the cutting-edges of the fingers are made self-sharpening. The lower members of the fingers are also constructed with spurs n' n' at their sides made in one piece with them, the spurs being long enough to prevent the grain or grass from passing backward along the side of the finger into the notches of the scallops of the cutter, but not so long as to meet and form a continuous bearing, which would involve the necessity of fitting their adjacent ends accurately to each other. This mode of preventing the backward passage of the material being cut is an improvement upon that in which the effect is produced by riveting a long bar to the under members of the fingers, as it involves less expense in construction.

The raking-platform W of the machine (when grain is to be harvested) is attached to the finger-beam G. The reel V is supported by this platform, so as to move with the finger-beam when it is raised or lowered. The gudgeon of the outer end of the reel is received in one of a series of holes formed in a reel-bearer, X, which projects forward from a short reel-post, Y, secured to the platform at its outer rear corner. The reel-bearer is pivoted at its rear end to the head of this reel-post, and is provided with a toothed plate, Y^1, which engages in the spaces between the teeth of a segment, Y^2, secured to the reel-post. The segment has a curved slot in it, through which a bolt is passed, which also passes through the reel-bearer, so as to hold the toothed plate and bearer to the segment. The inclination of the reel-bearer may be varied for the purpose of raising or lowering the outer end of the reel by slacking the nut of the bolt, and engaging the toothed plate with others of the spaces between the teeth of the segment Y^2. The shaft of the reel is supported at its inner end by a reel-post, X^1, erected upon the inner forward corner of the platform. The reel-shaft is fitted with a belt-pulley, Z, to which a round belt, q, is applied to cause it to revolve. This belt is put in motion by being applied to a second belt-pulley, Z', that is secured to the shaft D of the running or ground wheels B B.

In order that the tautness of the belt may not be materially affected by the change in the position of the reel, due to its movement with the finger-beam and platform relatively to the gearing-carriage, the bearing r of the inner end of the reel-shaft, although supported by the inner reel-post X^1, is connected with the forward end of the gearing-carriage by a radius-bar, X^2, so as to maintain its distance therefrom, although it rise and fall, and the belt q, instead of being conducted directly from the pulley Z' on the driving-shaft D to the reel-pulley Z, is conducted forward and backward to and from two supplementary belt-pulleys, z z', that are located at or near the pivot i that connects the radius-bar X^2 with the gearing-carriage, one

pulley, z, being pivoted to the gearing-carriage, and the other, z', to the radius-bar. As these pulleys are, for all practical purposes, substantially at the center of movement of the reel in rising and falling with the radius-bar, such movement does not materially affect the belt q, and the latter retains its tautness, while the rising and descent of the reel is not affected by the transmission of power to it.

On the other hand, the pulley z, located upon the gearing-carriage, maintains always the same relation to the driving-
574 pulley Z', and therefore guides the driving member of the belt properly to that pulley, notwithstanding the change of position of the reel, caused by the unequal rising or descent of its two ends, while the other pulley z', being located on the radius-bar X^2, maintains the same relation to the reel-pulley Z, however the reel and the said pulley may vary its position relatively to the gearing-carriage, and therefore guides the slack member of the belt properly to the reel-pulley, notwithstanding its change of position. Hence the pulleys $z\,z'$ are guide-pulleys to guide the belt properly, and thereby prevent it from being cast off by the movement of the reel with the finger-beam in passing over uneven ground.

Another and equivalent arrangement of the belt and pulleys for maintaining the tautness of the belt (but not for preventing the casting of it off the pulleys) is represented at Fig. 3ª. In this case the radius-bar X^3 is pivoted upon a counter-shaft, D^3, which is carried by the gearing-carriage, and is fitted with a pulley, z, from which the belt q proceeds to the pulley Z on the reel-shaft. The counter-shaft D^3 on the gearing-carriage may be caused to revolve by a belt encircling pulleys secured to the shaft of the running-wheels and this counter-shaft, or in any other convenient manner.

The inner end of the reel may be set more or less forward of the finger-beam by shifting its bearing r forward or backward on the radius-bar, and the radius-bar X^2 is pierced with a series of holes, to which the bolt that holds the bearing r of the reel-shaft may be transferred when that bearing is shifted forward or backward. The inner end of the reel may be raised or lowered by turning the radius-bar X^2 up or down on its pivot i, and the reel-post X^1 is pierced with a series of holes, to one of which the bolt that holds the radius-bar to it may be transferred when that radius-bar is turned to a different position.

In order that the finger-beam may be rocked to depress or raise the points of the guard-fingers when the machine is used for reaping grain, the raking-platform W is not attached rigidly to the finger-beam, but is attached to it by hinges $g^4\,g^4$, Fig. 1, so that the finger-beam may be rocked while the platform retains its position, and the platform is retained in its proper position by being connected with the gearing-carriage by the inner reel-post X^1 and radius-bar X^2, which thus act as stay and link to hold the platform in addition to supporting the reel; and in order that the inner reel-post may so operate, its lower end is firmly connected with the raking-platform W by a metal shoe, x^4. The rocking of the finger-beam independently of the raking-platform W is insured by the connection of the caster or grain wheel T with the said platform, so that the

said wheel is combined with the finger-beam through the intervention of the hinge or hinges g^4, which combine the platform with the finger-beam. Hence the rocking of the finger-beam is not prevented by its combination with a raking-platform or a grain-wheel, but is under the control of the driver, who effects it by means of the rocking lever P, as may be found expedient to cut the grain at a greater or less distance from the ground, or to raise up lodged grain. Moreover, as the weight of the outer half of the platform is sustained by the grain-wheel instead of by the finger-beam, the latter is relieved from much strain, and is not so apt to vibrate or spring as it otherwise would be.

When the machine is to be used for cutting grass, the reel V, radius-bar X^2, and platform W, with the reel-supports, divider-frame, and caster-wheel T, are removed from the finger-beam G, and a small grass-divider with a track-clearer is bolted to the outer end of the finger-beam in the place of the outermost finger, as represented at U^2, Fig. 7. The rocking of the finger-beam is then under the control of the driver, who effects it by means of the rocking lever P, as may be found expedient, to conform to the surface, over which the cutter is passing. When used for reaping grain, the grain-divider U^1, Figs. 1, 4, and 5, which projects laterally beyond the end of the finger-beam, gathers in a mass of standing grain wider than the breadth of the cutting apparatus, and the grain at the stubble side is correspondingly gathered in by a grain-guard, U^3, that is supported by the inner reel-post X^1, and consequently moves up and down with the platform and cutting apparatus. When the machine is used for cutting grass, the grass-divider U^2, being at the end of the finger-beam, gathers in no more grass than the cutting apparatus can advantageously cut, and the swarth is narrower than when cutting grain. When the machine is used for reaping, the driver sits upon the seat Q, and the raker upon the end of the spring-frame Q^1 with his feet resting on a removable foot-board, Q^2, which is detached from the machine when the machine is used for mowing.

Having thus described a machine embodying all my improvements, I declare that I do not limit my new combinations to the particular forms represented in the drawings, but intend to vary the form and construction of the members of the combinations, or to use equivalent members in their places, as circumstances may render expedient.

What I claim as my invention, and desire to secure by letters patent, is—

1. The combination, as set forth, in a harvester, of the finger-beam with the gearing-carriage by means of the vibratable link, the draft-rod, and the two swivel-joints M and M^1, so that the finger-beam may both rise and fall at either end, and rock forward and backward.

2. The combination, as set forth, in a harvester, of the finger-beam, gearing-carriage, vibratable link, draft-rod, swivel-joints, and arm, by which the rocking of the finger-beam is controlled.

574½ 3. The combination, as set forth, in a harvester, of the gearing-carriage, rocking finger-beam, vibratable link, recip-

No 1044.
Plano Mfg. Co. } p. 575
v
Graham et al.

J. Pine.

575

Mower.

Patented Mar. 5. 1867

No 62681

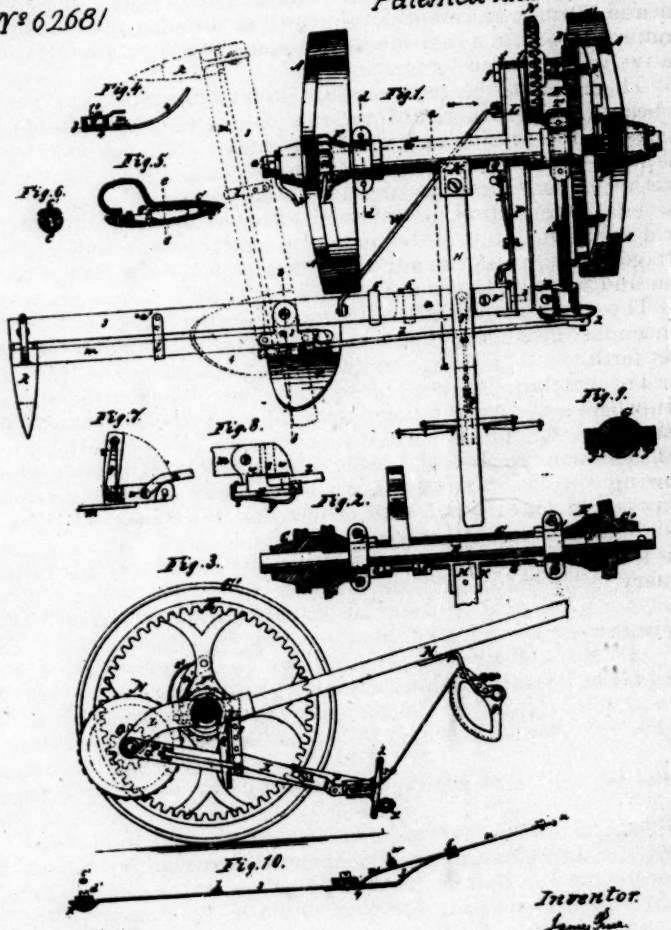

Witnesses.
Marcus Mercer.
R. A. Bannister

Inventor.
James Pine

rocating cutter crank-shaft on the gearing-frame, connecting-rod, connecting said crank-shaft with the cutter on the rocking finger-beam, and swivel-joint at the cutter.

4. The combination, in a harvester, of the gearing-carriage, finger-beam, vibratable link, grain-wheel, and lifting-connection for the grain end of the finger-beam, substantially as set forth.

5. The combination, as set forth, in a harvester, of the gearing-carriage, finger-beam, vibratable link, grain-wheel, lifting-connection, and lifting-connections for the inner or stubble end of the finger-beam, so that each end of the finger-beam may be raised or lowered relatively to the gearing-carriage.

6. The combination of the reel, arranged to move with the finger-beam, the gearing-carriage, radius-bar, and two guide-belt pulleys for the driving and slack members of the reel-belt, one of said guide-pulleys being arranged upon the gearing-carriage, and the other upon the radius-bar, substantially as set forth.

7. The combination, as set forth, of the finger-beam, gearing-carriage, swivel-joint M between the finger-beam and gearing-carriage, raking-platform, and hinge-connections between the finger-beam and raking-platform.

8. The combination of the raking-platform, finger-beam, hinge-connections, gearing-carriage, upright stay, and link, substantially as set forth.

9. The combination, as set forth, of the finger-beam with the grain-wheel and platform through the intervention of a hinge-connection.

10. The combination of the movable member of the clutch (for throwing the cutter-crank out of or into gear) with a clutch-lever composed of two parts, connected by notches, substantially as set forth.

In witness whereof I have hereto set my hand this 28th day of January, A. D. 1867.

ALVARO B. GRAHAM.

Witnesses:
D. N. BARKER.
GEO. W. DIVER.

(Here follows diagram marked p. 575.)

576 UNITED STATES PATENT OFFICE.

JAMES PINE, of Troy, New York.

Letters Patent No. 62681, dated March 5, 1867.

Improvement in Harvesters.

The schedule referred to in these letters patent and making part of the same.

To all whom it may concern:

Be it known that I, James Pine, of the city of Troy, county of Rensselaer, and State of New York, have invented a new and useful

improvement in mowing and reaping machines, and I do declare the following to be a full, clear, and exact description of the same, reference being had to the accompanying drawings making a part of this specification and to the letters of reference marked thereon.

My invention relates to the manner of supporting the gearing and cutting apparatus of a mowing and reaping machine; the manner of swinging around the cutting apparatus and supporting it when the machine is to be moved from place to place; connecting the driving power to the knife-rod in such a way that the cutting apparatus can be turned backward, and supporting it so as to be so transported without detaching the knife-rod from the connecting-rod or pitman; the improved manner of attaching the team to facilitate and lessen the draught of the machine; the method of adapting the cutting apparatus to uneven ground, and the improved manner of constructing the guard fingers, so as to avoid clogging, and a cheap and effectual way of plating the guard fingers, affording at the same time a good cutting edge and a means of escape for fibres of grass and other matter.

Similar letters of reference refer to similar parts in the different figures.

Figure 1 is a top view of the machine, with the wheels broken off at A, and the main driving or gear-wheel broken off at B.

Figure 2 is a top view of the axle and sleeve inverted, with a cross-section of the hubs of both driving-wheels, the main gear-wheel, and the ratchets.

Figure 3 is an end view of the machine taken on the line *a a*, Fig. 1, and looking in the direction of the arrow.

Figure 4 is a longitudinal section, showing the main shoe, the finger-bar, the finger-bar extension piece, the knife-bar, the main knife-holder, and the bolt which holds the whole in their proper position, taken on the line *b b*, Fig. 1.

Figure 5 is a longitudinal section of the outer or dividing shoe, and is a proper representation of the finger on an enlarged scale, the fingers being made on the same plan as the shoe and differing from it only in size.

Figure 6 is a cross-section of the dividing shoe on the line *c c*, Fig. 5.

Figure 7 is an end view, showing the connecting piece between the pitman and knife-bar and a portion of the pitman, a portion of the connecting piece turned back in a position to remove the pitman.

Figure 8 is a top view, showing the connecting piece with the knife-bar and pitman broken off.

Figure 9 is a cross-section of the axle and sleeve, together with the cap and screws which fasten them together, taken on the line *d d*, Fig. 1.

Figure 10 is a longitudinal section of the finger-bar, the finger-bar extension piece, main shoe, dividing shoe, and finger, with the bolts which hold them together.

To enable others skilled in the art to make and use my invention, I will proceed to describe the same with reference to the drawings.

Two main driving and supporting wheels, C and C′, are mounted upon a common axle, D, and turn freely thereon. The inner hub F′ of the main driving-wheel C′ is furnished with ratchet-teeth. The main gear-wheel E is keyed fast to the main axle D, close to the hub of the main driving-wheel C′. The sleeve G, which supports the pole, with parts of the gearing, to be hereafter described, is made open upon the under side, and can be readily placed astride the axle, and is confined thereon by means of the caps I I′, which, being secured to their places by means of the screws J J′, form ordinary journal boxes around the axle D, allowing the axle D to turn freely therein. By this arrangement the axle can be removed without displacing the gearing. The pole H, by which the machine is drawn, is firmly bolted in the socket K, cast upon the sleeve G, cast upon the sleeve piece, and extending rearwards and curving downwards is the projecting arm piece L. M is a short shaft or stud, which is fastened to the rear end of the projecting arm piece L, and is fixed in a position parallel with the main axle D. The bevel-wheel N and spur-pinion O are cast together, or are otherwise rigidly connected, and turn freely on the shaft or stud M, the spur-pinion O working in the main gear-wheel E. Upon the shaft or stud M is pivoted or hinged the rear end of the swinging-bar P. This swinging-bar, at its rear end, is formed with two prongs or ears, which are placed astride the curved arm piece L, as shown at *f f*,
577 Fig. 1. The shaft M is placed through holes in reach of the prongs or ears of the swing-bar P and the end of the curved arm piece L, the gears N and O having been previously slipped on, and is firmly held to its place by means of a nut, as shown at *g*, Figs. 2 and 3. The swinging-bar P, being pivoted at the rear end of the curved arm piece L, extends forward under the axle, and its forward end is free to vibrate in a circle up and down around the shaft M as a centre. This swinging-bar is prevented from vibrating or swinging laterally by passing between two arms or prongs, Q and Q′, cast upon and extending downwards from the sleeve, which arms or prongs serve as guide to the swinging-bar P. Upon each end of this swinging-bar is cast a projection, one of which is shown at R, Fig. 1, which are furnished with suitable boxes or bearings, in which the crank-shaft S turns. This crank-shaft S is driven by the bevel-gear N, working into the bevel-pinion T. The lower end of the crank-shaft is furnished with a balance-wheel with a wrist-pin, and drives the knife in the ordinary manner. On the inner or grass side of the swinging bar P, and near the lower or front end thereof, is attached the finger-bar connecting piece U, by means of the hinge V; and near the upper end of the swinging-bar P is hinged the diagonal brace-bar W, which is hinged at its lower end to the finger-bar connecting piece U. This diagonal brace-bar W supports the finger-bar from back thrust. To the swinging-bar P is attached, in front of the axle D, the lever X, having its fulcrum at *h*. The uses of this lever will be more fully explained hereafter. Thus it will be seen that the swinging-bar P serves to carry the crank-shaft and its attachments, the end of the finger-bar extension piece U, and the fulcrum for the lever X. The hinge V is fastened rigidly to the

end of the finger-bar extension piece U, and is connected to the swinging-bar P by means of an intermediate coupling piece Y. This coupling piece Y is so attached to the swinging-bar P by the bolt *i* as to allow the finger-bar extension piece, and consequently the finger-bar, to turn upon its longitudinal axis, or, in other words, to rock or roll in the line of its length, the bolt *i* being the centre of motion. The pitman *z* is connected to the balance-wheel 2 by a universal-joint connection, and to the knife-bar connecting piece by a simple hook. This universal-joint connection of the pitman with the crank-pin is rendered necessary by the varying positions of the swinging-bar P, and by means of its jointed connections, the varying positions of the finger-bar and cutting apparatus with reference to a horizontal plane. The finger-bar, and its connection with the machine by means of the finger-bar extension piece, is shown in the longitudinal section, Fig. 10. 3 is the finger-bar, extending from the dividing or outer shoe past the main shoe 4, and then turns up and is clamped snugly to the finger-bar extension piece U, by means of the link 5. This link is a rectangular piece of metal made to fit over the end of the finger-bar 3 and the extension piece U. The end of the finger-bar being slightly tapered, the link can be slid backward or forward, and thus clamping or unclamping the finger-bar and the finger-bar extension piece at the will of the operator. *m* is the knife-rod to which the cutters are attached. *l* is one of the pieces fastened to the finger-bar to keep the knife-rod in place. The hub of the main driving-wheel C′ being made with ratchet-teeth, when the machine is drawn forward, communicates motion to the main gear-wheel F by means of the pawl, which is fastened to the main gear-wheel and is held in gear with the ratchet by the spring *o*′. The main gear-wheel being fast to the main axle, communicates motion to it, and also gives motion to the spur-pinion O and the bevel-gear N. The bevel-gear N imparts motion to the bevel-pinion T, and through it to the crank-shaft S, and thereby to the knife. The driving-wheel C is furnished with a pawl, *n*, and spring, *o*, which, in a similar manner, gives motion to the ratchet F. This ratchet is keyed fast to the axle D, so that when the machine is drawn forward the driving-wheel C gives motion to the axle, and through it to the other parts of the gearing of the machine. It is plain that when the machine is backed the pawls will not take into the ratchets, and motion will be given to the driving-wheels only. Upon the under side of the pole H, and a suitable distance in advance of the cutting apparatus, is fastened the forked hanger *p*. Upon the lower end of this hanger is pivoted the sector *q*, at its centre in a vertical position, with its arc towards the cutting apparatus. The arc of the sector is furnished with a score, which carries a flexible cord or chain. One end of the cord or chain is fastened to the front upper end of the arc, and the other end is attached to the finger-bar extension piece by means of the metallic connection *r*. The upper radius of the sector is perforated by a row of holes, from near the centre to the arc, and the double-trees to which the team is attached are fastened in either of these holes, as the circumstances of the case require. The object of this mode of attachment is to

convey a portion of the power required to draw the machine direct to the finger-bar, and thereby lift the bar sufficiently from the ground to relieve it of friction, and also to obtain a lower line of draught than is ordinarily attained in mowing machines. By this arrangement the power required to draw the machine can be divided between the pole and the finger-bar and its connections, and graduated between the two to suit the circumstances of the case. It is plain that the nearer the centre of the sector the double-trees are attached the greater is the draught expended on the pole and the less on the finger-bar extension piece and *vice versa*. By the use of the sector as here arranged, a certain portion of the draught will always be upon the finger-bar and tend to raise it, both upon level ground and when the cutters are passing over knolls or elevations, as the point of attachment of the cord or chain to the sector is always above the plane of the finger-bar extension piece, and the line of its draught must be always in an upward direction. In machines of this class one of the objections, in practice, has been found to be in crossing furrows, which often occurs, running in a direction perpendicular to the path of the machine. When the finger-bar and cutting apparatus drop down into one of these depressions or furrows the points of the fingers have a tendency to pierce the soil upon the up-hill side of the furrow, and cause a sudden strain, both upon the team and machine, in getting out of the furrow. It is to overcome this objection that the lever X, before alluded to, is used. Upon the sleeve G, and near the top of the inner guide piece Q, is cast an ear. To this ear is hung loosely the perforated bar *s*. In either of the holes in this perforated bar the upper end of the lever X is fastened by a screw-bolt. The lower end of the lever X is pivoted to the connecting piece V, and near its centre is pivoted to the swinging-bar P at *h*, with a screw, *h*, for a fulcrum. It is plain that when the finger-bar and cutting apparatus encounter one of these furrows they will drop down vertically, and as soon as this vertical motion takes
578 place, the lever X, being dropped down at its forward end, together with the finger-bar, and being fastened at its upper end to the perforated bar, must turn upon its fulcrum *h*, and thereby depress the back edge of the finger-bar, and raise proportionately the points of the fingers, and thus cause the finger-bar and its extension piece to turn upon its longitudinal axis. This feature is self-acting, and the desired result is accomplished without the aid of the operator of the machine. A seat for the driver, and also a lever arrangement by which the driver can elevate the finger-bar and cutting apparatus at his will, are used upon the machine. I have not deemed it necessary to show them upon the drawings, as it is accomplished in the same manner as upon my previously patented machines. When it is desired to move the machines from field to field, the pawls *n* and *n'* are thrown out of connection with their corresponding ratchets by means of the springs *o* and *o'*. The link 5 is slipped along the extension piece to the position as shown in red ink, Fig. 1, and thereby the finger-bar and the extension piece are disconnected. The finger-bar and cutters, together with their connection, having been previously raised up by the driver, the fin-

ger-bar and cutting apparatus will turn freely backward upon the pin 10, Figs. 1 and 4; and by means of the swivelled connection of the finger-bar extension piece with the swinging-bar P, upon the bolt *i*, the said bar and cutting apparatus are moved back and in a plane inclined upward to the horizon, and are supported above the axle by means of the supporting piece *b'*, the hole a^1, in the finger-bar, fitting over the end of the piece *b'*. The connecting piece between the pitman *z* and the knife-rod *m* is so constructed as to allow the finger-bar and cutting apparatus to be turned backward, and also returned to its place for work without disconnecting the pitman from the knife-rod. This connecting piece, Figs. 7 and 8, is made of a separate piece of metal, *w*. A vertical hole, 9, passes through this vertical piece, through which passes the pin which is attached to the knife-rod *m*, and this pin serves to convey motion from the connecting piece *w* to the knife-rod, and is sufficiently loose to turn in said hole. A horizontal hole, 8, also passes through the connecting piece, which receives the end of the pitman. A latch, *x*, provided with a spring, *y*, turns freely upon the bolt 6 as a centre. The object of this latch is to hold the end of the pitman in its place, it being confined there by the action of the spring *y*. When it is required to remove the knife, the latch is raised up, as shown at Fig. 7, and the end of the pitman can be readily slipped out, the upper end being provided, as before stated, with a universal joint. The connecting piece *w* is held down by means of the thin piece a^3, which projects over the connecting piece *w*, and is long enough to cover it during the whole length of the vibration of the knife. By this means this end of the knife-rod and pitman is held down and guided. The dividing shoe *k*, as shown at Figs. 1, 5, and 6, is a proper representation of the shoe as well as the guard-fingers, the only difference being in point of size. The shoe and guard-fingers are made in two parts. The lower part *c* is made of malleable iron. The upper part *c'* may be made of other metal. The two are united together at *c'* near the point. The upper portion *c'* of the guard-finger extends back from its point of connection with *c*, affording a support for the material to be severed sufficiently above the lower portion to allow the free passage of the cutter between the upper and lower portion of the finger, and, until it reaches a point immediately over the front edge of the knife-rod, is of a width corresponding with width of lower portion. At this point the upper portion is reduced in size, and to a round form, or nearly so, as shown at *c'*, in Fig. 10, and bends suddenly upwards, and is elevated above the cutter-bar, and extending upwards and backwards, and near the rear of the finger-bar bows down, as shown at Fig. 5, and is fastened to the finger-bar by the bolt *d'*, which bolt also serves to hold the guard-finger to the finger-bar. The lower portion of the finger is cast with a depression or is hollowed out, from just in front of the cutter to near the front edge of the finger-beam. This is plainly shown at Figs. 5 and 6. At *e*, Fig. 5, a small knob or projection is cast, which extends from the lowest part of the hollow of the guard-finger upward, and its front edge is just in rear of the front edge of the knife-rod. Within the depression of the lower

F. BRAMER.

Harvester.

No. 51,546.

Patented Dec. 19, 1865.

579

No. 1044.
Plano Mfg. Co.
v
Graham et al.
p. 579

Fig. 1

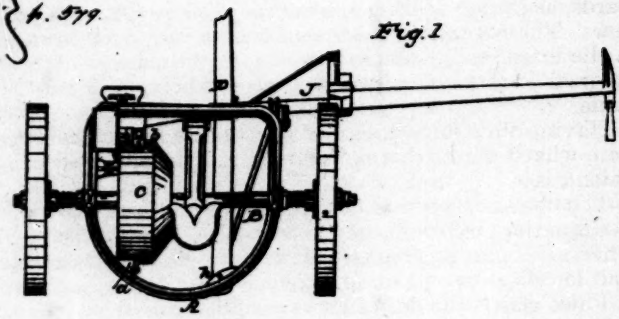

Fig. 2

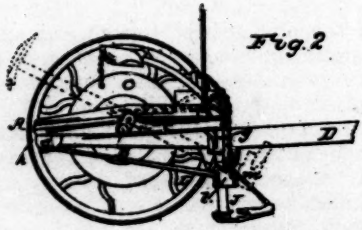

Fig. 3

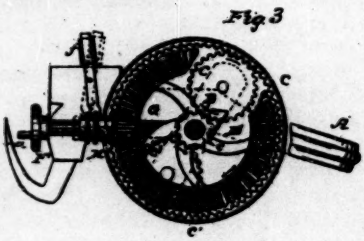

Witnesses
P. J. Dodge
McBurgess

Inventor
By his atty
W. Dodge

part of the guard-finger, and immediately in front of the knob *e*, is fitted a steel plate, which completely faces that portion of the guard-finger against which the cutter works. The steel facing may be easily formed under swedges and be made to fit to its place. The edge of this steel plate is thus presented as a ledger plate for the cutters to cut against. The plate is held in place at the forward end between the upper and lower portions of the guard-finger, and at the back end by the knob *e*, the knob *e* having been bent over forwards, as shown in Fig. 5, which can be readily done with a hammer. The portion of the guard behind the knob *e*, and nearly up to the finger-bar, is left hollowed out for the free escape of the fibres of grass or other foreign material which may be drawn under the knife.

Having thus fully described the nature and object of my invention, what I claim therein as new, and desire to secure by letters patent, is—

The use of an open sleeve, upon which is suspended the gearing to drive the knife, and the attachment to hold the cutting apparatus when said sleeve is furnished with journal boxes, substantially as and for the purposes set forth.

I also claim the use of the swinging-arm P, when hinged at its rear end to the projecting portion L of the sleeve, and when said arm supports the gearing and cutting apparatus, substantially as described.

I also claim the use of the downward projecting arms or guides Q Q′, and the rearward projecting arm piece L, in combination with the open sleeve, substantially as described and for the purposes set forth.

I also claim the combination of the hinge V, the coupling piece Y, and the lever X, substantially as and for the purposes set forth.

I also claim the use of a graduated sector-shaped draught-bar, when both the cord or chain and double-tree or team are united to it above its pivoted point, substantially as and for the purposes set forth.

JAMES PINE.

Witnesses:
MOSES WARREN.
R. A. PARMENTER.

(Here follows diagram marked p. 579.)

580 UNITED STATES PATENT OFFICE.

FRANK BRAMER, of Fabius, New York.

Improvement in Harvesters.

Specification forming part of Letters Patent No. 51546, dated December 19, 1865.

To all whom it may concern:

Be it known that I, Frank Bramer, of Fabius, in the county of Onondaga and the State of New York, have invented certain new

and useful improvements in harvesting or mowing machines; and I do hereby declare that the following is a full, clear, and exact description thereof, reference being had to the accompanying drawings, and to the letters of reference marked thereon, making part of this specification, in which—

Figure 1 is a plan view; Fig. 2, a side view, and Fig. 3 a view of the driving-gear detached and enlarged.

My invention consists in a novel arrangement of the gearing and manner of mounting the same, a novel manner of securing the cutter-bar when not in use, and various other details, to be hereinafter described.

To enable others skilled in the art to construct and use my improvements, I will proceed to describe them in detail.

A represents the main frame, which is made of metal and cast in one piece and mounted centrally on the axle B, as clearly shown in Fig. 1.

A drum, C, cast hollow with an internal gear, as shown in Fig. 3, is slipped loosely on the axle B, and is secured to the frame A by means of the horizontal flange *b* at its front, and a vertical flange, *a*, at its rear edge, corresponding flanges being cast on the frame, to which the flanges *a* and *b* are bolted. In order to adjust the drum C either vertically or horizontally, thin plates or wedges are inserted between the flanges either at front or rear, as may be necessary. By this arrangement of the flanges it will be perceived that the drum C can be readily adjusted both vertically and horizontally, and thus secured in a position at right angles to the axle B, concentric therewith, which position is absolutely necessary to insure the free and perfect working of the gear.

It is obvious that by making slots in the flanges *a* and *b*, or in those to which they are bolted, or in both, the drum can be adjusted without the use of the wedges or plates, as above described; but this means of adjusting is not found to work as well in practice, for the reason that the parts are more liable to get moved out of place by the jarring of the machinery. By my plan this is entirely obviated.

Within the drum C a cross-bar, E, is rigidly secured to the axle B, and upon pins or journals protruding from the face of this cross-bar E are mounted the two planet-wheels *c* and *c'*. These wheels are of such a diameter that they will just fill the space between and gear into the internal gear of drum C on one side, and on the other into the pinion *e*, which latter, together with the bevel-gear F, are rigidly secured to the sleeve *e'*, which latter works loosely upon the axle B, as shown in Fig. 3.

Upon the shaft I, which is placed at a right angle to the axle B, and supported near its front end by a suitable bearing in the front part of the main frame A, and at its rear end by an arm cast on the frame and projecting inward for that purpose, is secured the bevel-pinion G, so located as to gear into the bevel-wheel F.

It will thus be seen that as the machine moves forward the arm E is made to revolve with the axle in the direction indicated by the red arrow, the wheels *c* and *c'* being made to rotate on their axes in

the direction indicated by the black arrows while moving forward with the arms E, to which they are attached. The wheels *c* and *c'* cause the pinion *e*, and with it the bevel-gear F, to revolve, as indicated by the arrows, and as wheel F gears into pinion G, motion will be thereby imparted to it, and consequently to crank-pin *d* at the front end of shaft I, to which pin *d* the pitman or connecting-rod of the sickle is attached.

A clutch H, sliding upon shaft I and operated by the lever *f*, serves to throw the mechanism in and out of gear at pleasure.

The tongue D passes loosely through a stirrup or box, *g*, cast for it on the under front side of frame A, as shown in Fig. 2, and is secured at its rear end in a hollow lug or projection, *h*, which is also cast on the frame for that purpose. It will be observed that by this method of attaching the tongue the line of draft is thrown below the axle, and as some chance is given for a vertical play of the tongue in the stirrup *g*, it will be seen that when the force exerted in drawing the machine is brought upon the rear attachment of
581 the tongue at *h* it will tend to pull the rear portion of the frame down, thereby elevating the front portion, and thus relieving the animals' necks from the downward pressure of the tongue, so common in ordinary machines.

I attach the push-bar L to main frame A at the same point at which the tongue is fastened, by which the power used to propel the cutting apparatus is taken from the same point where the draft is applied, and thus the frame A is relieved from the strain that would be thrown upon it if the push-bar was attached at some other point.

The swing-bar J, which unites the cutting apparatus to the frame of the machine, is attached at its upper end by a ball-and-socket joint, which permits the cutting devices to adjust themselves to the surface of the ground automatically; but, to prevent the tendency of the front of the shoe and sickle to rise up, and to keep them down in proper position, I attach the push-bar L to the swing-bar J by means of the plate *l*, which projects upward from the top of bar J. The front end of L being pivoted at *m* above and in front of J constantly tends to push the front of the sickle down upon the ground and hold it to its work.

A slot is made in plate *l*, as shown in Fig. 2, through which a set-screw may be inserted and screwed into rod L, as indicated in red, for the purpose of rendering the shoe and cutting apparatus rigid and preventing them from having the rolling or undulating motion common to them when not thus secured. This is found to be important when the machine is used for cutting heavy clover and similar substances, but in ordinary use the set-screw is not required.

On the right-hand end of the axles and outside of the wheel is secured a metallic piece, *n*, which, being loose on the axle, can be turned up into the position shown in Fig. 2. This piece *n* has a groove in its projecting end of proper size to receive the back edge of the finger-bar when the latter is raised up and turned over back, as shown in Fig. 2. A pin passing through a hole in the piece *n*, and also in the cutter-bar, serves to secure the latter in place.

The drum C is cast with a back to it, in which a central hole is made for the axle to pass through after being secured in place. The front of the drum is closed by a wooden or thin metallic cover, by which means the gearing is all inclosed except the bevel-pinion G, and in this way the gearing is protected from injury by dust, grit, sticks, &c., which would otherwise get into it.

By this construction and arrangement of parts I am enabled to produce a machine that operates in a most perfect and satisfactory manner, it being light, easy to manage, and very desirable.

Having thus fully described my invention, what I claim as new, and desire to secure by letters patent, is—

1. The drum C, provided with the vertical flange *a*, the horizontal flange *b*, and the internal gearing, in combination with the planet-wheels *c c'*, mounted on the arm E, sleeve *e'*, provided with the pinion *e*, bevel-wheels F and G, and clutch H, all arranged and operating as herein shown and described.

2. The rest *n*, constructed as shown, and secured to the end of the axle for the purpose of holding the cutter-bar securely when folded back, as shown in red in Fig. 2.

3. The slotted plate *l*, attached to the brace-bar J, in combination with the push-bar L, having its front end pivoted at *m*, as shown and described.

4. Adjusting the drum C by means of plates or wedges inserted between the vertical flanges *a* at the rear, and between the horizontal flanges *b* at the front, either or both, as may be desired.

FRANK BRAMER.

Witnesses:
W. C. DODGE.
AUGS. JORDAN.

(Here follows diagram marked p. 582.)

583 UNITED STATES PATENT OFFICE.

JAMES PINE, of Troy, New York.

Improvement in Mowing-Machines.

Specification forming part of Letters Patent No. 44655, dated October 11, 1864.

To all whom it may concern:

Be it known that I, James Pine, of Troy, in the county of Rensselaer, and State of New York, have invented a new and improved mowing-machine; and I do hereby declare that the following is a full, clear, and exact description thereof, which will enable any person skilled in the art to make and use the same, reference being had to the accompanying drawings, making a part of this specification, in which—

Figure 1 is a side sectional view of my invention, taken in the line *x x*, Fig. 2; Fig. 2, a plan or top view of the same; Figs. 3 and 4, views of shoe and plate for adjusting the track-clearer.

Similar letters of reference indicate corresponding parts in the several figures.

J. Pine,
Mower.

582

No. 44655

Patented. Oct. 11. 1864

No. 1044
Plano Mfg. Co.
v.
Graham et al
} p. 582

Fig. 1.

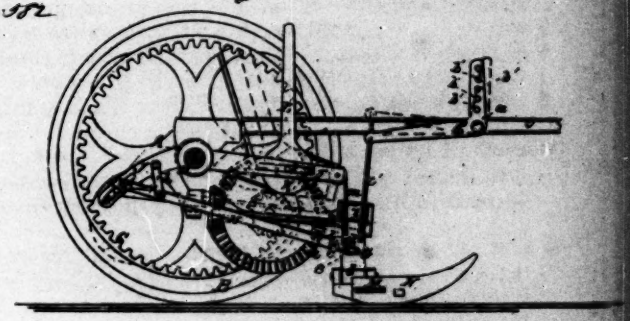

Fig. 2.

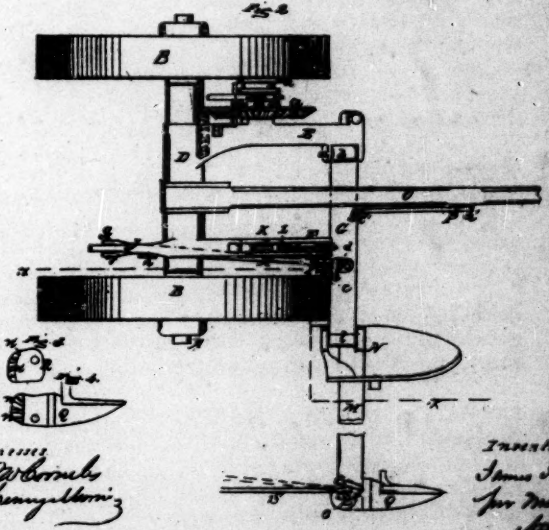

Witnesses
J. W. Cornelius
Henry Morris

Inventor
James Pine
per Munn & Co.
Attorneys

This invention relates to a new and useful improvement in adjusting or raising and lowering the cutter-bar, and in part connected therewith—to wit, the brace, rod, and track-clearer. The invention also relates to an improved draft attachment for keeping the cutter-bar free from the surface of the ground, and also in an improved means for connecting the working parts with the axle of the machine, whereby the use of a framing for the purpose is avoided.

The object of the invention is to obtain a mowing-machine which will have a light draft, be capable of being economically manufactured, and admit of having its cutter-bar raised and lowered in a vertical plane, and with but a limited movement of the lever employed for adjusting or raising and lowering said bar, and also to admit of having its track-clearer adjusted so as to have a more or less oblique position, as circumstances may require.

A represents the axle of the machine, on which two wheels, B B, are placed loosely, the wheels B B being connected to the axle, when moving forward, by means of pawls and ratchets arranged in the usual way.

To the axle A there is firmly keyed a toothed wheel, C, from which motion is communicated to the sickle-driving mechanism through the medium of gearing *a* and a crank-shaft and pitman, as usual.

On the axle A there is placed loosely a sleeve, D, which has two arms, E F, projecting forward from its front side.

To the end of the arm E a bar, G, is connected by a joint, *b*, and this bar G is braced by a rod, H, the front end of which is attached to G by a swivel-joint lock, I, formed by a joint, *c*, connected by a swivel, *d*, to a plate, *e*, on G, as clearly shown in both figures. The back end of the brace H is provided with a fork, *f*, through which a pin, *g*, passes, said fork receiving a curved arm, J, which projects from the rear side of the sleeve D, and which has a curved slot, *g'*, made in it for the pin *g* to pass through. The back part of the brace H is also suspended from the arm J by means of a swinging pendant, *h*. (Shown clearly in Fig. 1.)

The arm F is in line with the arm J, and the former has a vertical slot, *i*, made longitudinally in it, and also has a longitudinal horizontal slot, *j*, made in it.

In the vertical slot *i* a wheel or pulley, K, is fitted, its axle *k* being placed in the horizontal slot *j*. This wheel or pulley has a lever, L, attached to it and extending upward any suitable height.

M represents the cutter-bar, which is connected by a joint, *l*, with the bar G, said cutter-bar near this joint *l* being provided with a shoe, N. The bar G is connected to the wheel or pulley K by means of a cord or chain, *m*.

From the above description it will be seen that by a limited movement of the lever L the bar G and cutter-bar M will be raised, for the reason that the wheel or pulley L, to which the said lever is attached, has two movements—to wit, a rotary one and a sliding one—the latter being obtained in consequence of the axle *k* sliding in the horizontal slot *j*. This limited movement greatly facilitates the raising and lowering of the cutter-bar, and it will be seen that

in consequence of the brace-rod H being attached to the bar G and arm J, as shown, the bar G and cutter-bar M are allowed to rise and fall in a vertical plane, and consequently with but little friction and without subjecting either the rod H or bar G to any unnecessary friction, the rod H being allowed a certain degree of longitudinal play on account of its back end working in the curved slot *g'* in the arm J, and the swivel-joint lock I forming a flexible connection between the rod H and bar G.

O is the draft-pole, which is attached directly to the sleeve D.

584 P is a draft-lever, of bent or right-angular form and attached to the draft-pole O by a fulcrum-pin, *a'*, the upper part or arm of which is perforated with a series of holes *b'*, in any of which the hook of the double-tree is fitted. The lower arm of this lever is connected by a cord or chain, *c'*, with the bar G. By this arrangement the draft is made subservient in keeping the cutter-bar M slightly elevated, so that it may run freely over the surface of the ground, and the strength of the pull on said lever may be varied by connecting the double-tree higher or lower to the upper arm of the same.

To the outer end of the cutter-bar M there is attached a shoe, Q, which may be of the usual or any proper form, and is provided at its back end with a series of teeth, *u*, with which similar teeth, *n'*, on the under side of a plate, R, engage, said plate being on the upper surface of the cutter-bar, and both the plate and the shoe being secured to it by a screw, *o*.

To the plate R a track-clearer, S, is attached of the usual form, and it will be seen by loosening the screw *o* the plate R may be turned to give the track-clearer more or less of an oblique position, and that the teeth *n n'* will, when the screw *o* is screwed up, hold the said plate and track-clearer firmly in place. This track-clearer is adjusted according to the state or condition of the crop of grass, so that, whether the latter be heavy or light, a free track will always be obtained for the team.

Having thus described my invention, what I claim as new, and desire to secure by letters patent, is—

1. The movable or adjustable lever L, arranged substantially as shown, for raising the cutter-bar.

2. The brace H, arranged and applied, substantially as shown, to serve as an efficient brace or stay for the cutter-bar and at the same time not interfere with the raising and lowering of the latter, as set forth.

3. The draft-lever P, applied to the draft-pole and bar G of the cutter-bar M, to operate in the manner set forth.

4. The track-clearer S, applied to and made adjustable upon the outer end of the cutter-bar M by means substantially as and for the purpose specified.

JAMES PINE.

Witnesses:
JAMES P. HALL.
M. M. LIVINGSTON.

(Here follows diagram marked p. 585.)

D. B. Lucky.

Mower.

585

No. 1044.
Plano Mfg. Co.
v.
Graham et al.
p. 585

No. 44,239

Patented Sep 13. 1864

Fig. 1

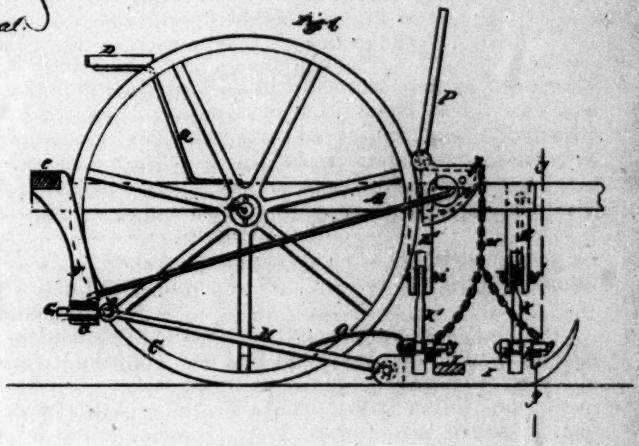

Fig. 2

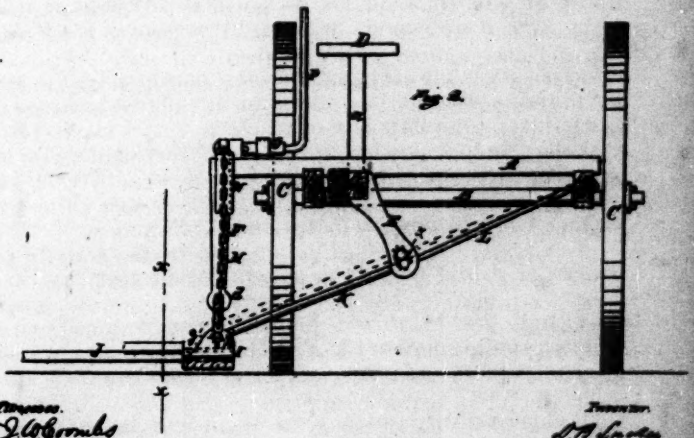

Witnesses.
J. W. Coombs
A. W. Reed

Inventor.
D. B. Lucky
per Munn & Co
Attys

586 UNITED STATES PATENT OFFICE.

D. B. LUCKEY, of Bloomingburg, assignor to D. B. LUCKEY, of same place, and S. S. BOARDMAN, of Rochester, New York.

Improvement in Harvesters.

Specification forming part of Letters Patent No. 44259, dated September 13, 1864.

To all whom it may concern:

Be it known that I, D. B. Luckey, of Bloomingburg, in the county of Sullivan and State of New York, have invented certain new and useful improvements in grain and grass harvesters; and I do hereby declare that the following is a full, clear, and exact description thereof, which will enable any person skilled in the art to make and use the same, reference being had to the accompanying drawings, making a part of this specification, in which—

Figure 1 is a side view of my invention, the cutter-bar being in section, as indicated by the line *x x*, Fig. 2; Fig. 2, a front sectional view of the same, taken in the line *y y*, Fig. 1.

Similar letters of reference indicate the same parts.

This invention relates to a new and improved grain and grass harvesting machine of that class in which the cutter-bar is connected to the machine by a joint to admit of the cutter-bar rising and falling freely to conform to the inequalities of surface over which it may pass, and also to admit of its being turned up out of the way when the machine is not in use or when it is being drawn from place to place.

The object of the invention is to obtain a grain and grass harvester of the class specified which will be strong and durable, admit of the cutter-bar working freely to conform to the undulating surface of the ground, and which will also admit of the guards and front edge of the cutter-bar rising in case of meeting with any obstruction, so that it may readily pass over it.

A represents a rectangular frame, which is mounted upon an axle, B, having a wheel, C, upon each end of it.

D is the driver's seat, placed upon a support, *a*, which is secured to the framing.

E E′ are two pendants, which extend downward in a slightly-oblique position from a longitudinal bar, *b*, of the framing, one pendant being a short distance in front of the other, as shown clearly in Fig. 1.

To the rear cross-bar, *c*, of the frame A, at its right-hand end, there is attached a pendant, F. This pendant is at the outer side of the right-hand wheel C, and it is provided at its lower end with a tube, *d*, in which a small shaft, G, is placed and allowed to turn freely. To the front end of this shaft G a rod, H, is connected by a universal joint, *e*, which may be formed simply of two eyes or links fitted one within the other, and the front end of the rod H is connected by a

joint, *f*, with the rear part of a shoe, I, said joint *f* admitting of the shoe working up and down or vertically.

To the shoe I the cutter-bar J is attached at right angles, and the shoe is connected to the pendants E E′ by means of rods K K′, pins *g* passing through the rods and through lugs *h*, on the shoe to form joints. The rear rod, K′, is fitted in the rear pendant, E′, by means of a pin, *i*, forming an ordinary joint; but the front rod, K, is secured in the front pendant, E, by means of a pin, *j*, passing through an oblong slot, *k*, to admit of a certain degree of play of said pin, as will be fully understood by referring to Fig. 2. The pin *j* has a light rod, L, connected to it, the outer end of which is attached to the left-hand side of the framing A.

The shoe I is connected by a chain, M, to a segment, N, the latter being on a shaft, O, at the front part of the framing, and the former provided with a lever, P, by actuating which the shoe and cutter-bar may be raised above the surface of the ground when desired.

From the above description it will be seen that the cutter-bar is braced in a thorough manner, the rods H K K′ firmly holding the shoe in position, while they admit of the following important results, viz: first, of the cutter-bar rising and falling to conform to the inequalities of the surface of the ground over which it may pass; second, of the cutter-bar being turned upward in a vertical position when the machine is being drawn from place to place; and, third, in allowing the front part of the shoe and cutter-bar to rise, in order that it may pass over obstructions. This latter movement, it will be seen, is allowed in consequence of the pin *j* of the front rod, K, working in the oblong slot *k* of the front pendant, E. The two first-described movements have been previously obtained; but the cutter-bar has not been well braced, and the machines are liable to give away. In consequence of having two rods, K K′, attached to the shoe the latter is prevented from being swayed laterally either to the right or left, while the rod H serves as an effectual stay at the rear of the shoe and without at all interfering with the
587 movements of the shoe and cutter-bar. The rod L prevents the pin *j* from binding in the slot *k* of the pendant E, thereby obviating friction and admitting of a free vertical play of the outer end of the rod K.

I would remark that a spring, Q, may be attached to the back part of the shoe I, to bear upon the rod H and prevent an unnecessary shaking of the front part of the shoe and cutter-bar.

I would further remark that I do not confine myself to the use of two rods, K K′, for more may be employed if necessary or desired although I think two would be sufficient.

Having thus described my invention, what I claim as new, and desire to secure by letters patent, is—

1. The rod H, attached at its front end to the rear of the shoe I by a joint, *f*, and connected at its back end by a universal joint, *e*, to a shaft, G, fitted loosely in a tube or bearing, *d*, at the lower end of a pendant, F, at the rear of the frame A, substantially as and for the purpose set forth.

2. The connecting of the shoe I to the frame by means of two or

J. W. Prentiss & E. M. Birdsall. 588

Mower.

No. 43.225. Patented Jun. 21. 1864.

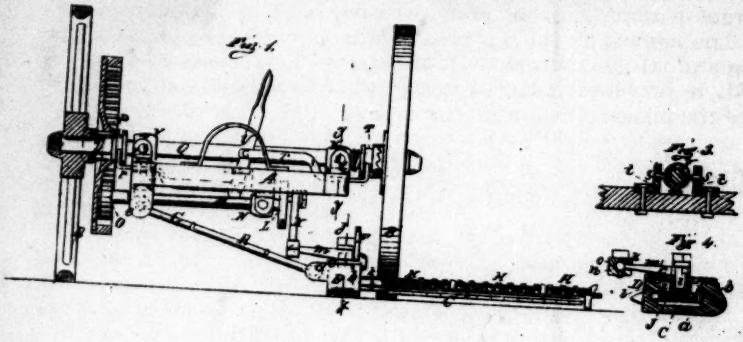

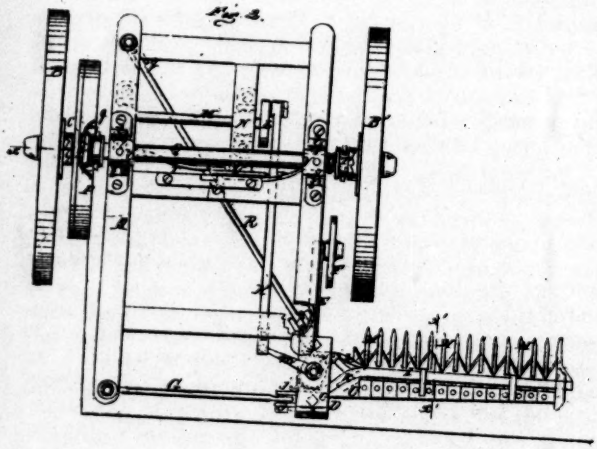

Witnesses
J. W. Crombs
Henry Morris

No. 10 44
Plane Mfg. Co.
v.
Graham et al.
} p. 588

Inventors
J. W. Prentiss
E. M. Birdsall
Jno. Munn & Co.
Attorneys

more rods, K K′, one or more of which is allowed a vertical play at its outer end by having its pin *j′* fitted in an oblong slot, *k*, in the pendant in which it is secured, to admit of the rising and falling of the front part of the shoe and cutter-bar, as herein described.

3. The connecting of the pin or pins *j*, which are allowed the rising and falling movement, to the frame A, by means of a rod or rods L, to prevent friction which would otherwise attend the working of the pin or pins *j* in their slots.

D. B. LUCKEY.

Witnesses:
M. M. LIVINGSTON.
GEO. W. REED.

(Here follows diagram marked p. 588.)

589 UNITED STATES PATENT OFFICE.

J. W. PRENTISS and E. M. BIRDSALL, of Penn Yan, New York.

Improvement in Harvesters.

Specification forming part of Letters Patent No. 43225, dated June 21, 1864.

To all whom it may concern:

Be it known that we, J. W. Prentiss and E. M. Birdsall, of Penn Yan, in the county of Yates and State of New York, have invented certain new and useful improvements in grain and grass harvesters; and we do hereby declare that the following is a full, clear, and exact description of the same, reference being had to the accompanying drawings, making a part of this specification, in which—

Figure 1 is a front view of the harvester, a portion of which is in section, as indicated by the line *x x*, Fig. 2; Fig. 2, a plan or top view of the same; Fig. 3, a vertical section of a portion of the same, taken in the line *y y*, Fig. 1; Fig. 4, a vertical section of a portion of the same, taken in the line *z z*, Fig. 1; Fig. 5, a vertical section of a portion of the same, taken in the line *x′ x′*, Fig. 2.

Similar letters of reference indicate corresponding parts in the several figures.

This invention relates, first, to a novel and improved cutting device, the same consisting of two reciprocating cutters, placed one above the other and working in opposite directions and through slotted fingers provided each with a tongue, against which both the cutters act, the tongue being between the two cutters, and all arranged in such a manner as to admit of a short stroke and rapid movement of the cutters with a very moderate application or expenditure of power, thereby insuring the work being done in a perfect manner and without the liability of the cutting device becoming choked or clogged.

The invention relates, second, to an improved means employed

for operating or driving the two cutters, which means consists of a rack at the inner end of each cutter and a vibrating toothed segment placed between the two racks of the cutters and gearing into the former, all being arranged in such a manner as to cause the necessary motion to be transmitted from the driving-shaft to the cutters in a very direct manner and with but little friction.

The invention relates, third, to a novel and improved means for connecting and disconnecting the traction-wheels of the machine with the sickle-driving mechanism, whereby the connection and disconnection above specified may be made with the greatest facility and without subjecting any of the gears and working parts of the machine to the wear and tear hitherto consequent on such manipulation.

The invention consists, fourth, in an improved mode of hanging the axle of the traction-wheels of the machine, as well as the driving-shaft thereof, whereby all warping or springing of the frame of the machine is compensated for, and the working parts allowed to operate equally as well if the frame should warp or spring—a contingency of not unfrequent occurrence—as if it retained its proper shape.

To enable those skilled in the art to fully understand and construct our invention, we will proceed to describe it.

A represents the frame of the machine, of rectangular form, and mounted on the two wheels B B′, of equal diameter.

C represents the cutter-bar, the inner end of which is attached to a socket, D, composed of a horizontal bar, *a*, with an upright portion, *b*, at each end, and a cap, *c*, secured to their upper ends. This socket D has an arm, E, projecting from its front side at right angles, said arm having a wheel, F, at its front end, which serves as a guide and a support for the cutter-bar, retaining the latter in a proper relative position with the earth and enabling the cutter-bar to rise and fall at its front edge to correspond to the inequalities of surface over which it may pass.

To the inner side of the socket D there is attached by a joint, *d*, one end of a rod, G, the opposite end of the latter being attached by a joint, *e*, to the left-hand side of the frame A at its back end, as shown clearly in Fig. 1. This arrangement admits of the cutter-bar rising and falling bodily, or at either end, to suit the surface of the ground over which it may pass. This feature, however, is equivalent to the double joint, as seen in the harvesting machine generally known as the "Buckeye."

H represents fingers, which are attached to the cutter-bar C, and are each provided with two longitudinal slots, *f f*, so as to form a central tongue, *g*, as shown clearly in Fig. 5.

I I′ are two cutters, which are constructed with the ordinary V-shaped teeth and worked one above the other. The upper cutter, I, has its teeth *h* working in the upper slots *f* of the fingers H, and the teeth of the lower cutter work in the lower slots *f* of the fingers, the tongue *g* being between the teeth of the two cutters. The teeth of the upper cutter I are beveled on their upper surfaces, while the teeth of the lower cutter are beveled on

their lower surfaces, the cutting-edges of the teeth of both cutters working over the central tongues, *g*. These two cutters have a reciprocating motion and work simultaneously in opposite directions, the teeth of each cutter working from the center of one finger to the center of the one immediately adjoining. The cutters are operated by means of a vibrating double-geared segment, J, the shaft *i* of which is fitted vertically in the socket D. This segment J gears into racks *j j*, which are formed at the inner end of the bars *k k*, to which the teeth of the cutters are attached, the segment J being provided at each end with a lip or flange, *l*, which retain or hold the bars *k* down upon the cutter-bar C. (See Fig. 4.)

The segment J is vibrated by having an arm, *m*, which is attached to the upper end of the shaft *i*, connected to a pitman, K, by means of a ball-and-socket joint, the ball *n* being at the end of the arm *m*, and the socket *o* being in the end of the pitman K. (See Fig. 4.) This pitman K is connected to a crank-pulley, L, on a shaft, M, the bearings N N of which are at the under side of the frame A, the shaft M having a pinion, O, at one end, which gears into a wheel, P, on the axle Q of the wheels B B′. By means of this arrangement of the two cutters I I′ and the double-slotted fingers H, with a central tongue, *g*, between the teeth of the two cutters, we are enabled to get up a rapid motion of the cutters with a very moderate expenditure of power, and without the liability of having the cutters choked or clogged—a contingency of frequent occurrence with the ordinary single cutters. The central tongues, *g*, insure a clean, smooth cut, and in connection with the two cutters form, it is believed, a very simple and perfect cutting device for harvesters.

By operating the cutters I I′ through the medium of the double vibrating geared segment J and racks *j j* very little friction is produced, and the parts are not liable to get out of repair or become deranged by use. By having the arm *m* of the shaft *i* of the vibrating segment J connected to the pitman K by a ball-and-socket joint, as shown, the segment J may be operated under the rising and falling of the cutter-bar with the least possible amount of friction, said joint compensating for the varying relative positions of the arm *m* and pitman K.

To the front end of the socket D there is secured by a joint, *p*, the back end of a rod, R, the front end of which is connected by a joint, *q*, to the left-hand side of the front part of the frame A. This rod R retains or holds the cutter-bar, preserving it from any strain under the draft movement of the machine, and at the same time serving to greatly diminish side draft.

The wheels B B′ are placed loosely on their axle Q, and the wheel P, into which the pinion O gears, is toothed at the inner side or edge of its periphery. This wheel P is not fitted directly on the axle Q, but is placed loosely on a clutch, S, on the axle, which clutch, when shoved outward or toward the wheel B, engages with the hub of the latter and connects it with the axle, the clutch S being allowed to slide through the wheel P, but the latter being connected with the former, so as to turn with it at all times. A similar clutch, T, also connects the other wheel, B′, to the axle Q, and these

clutches are operated simultaneously by means of rods *r r*, connected with a lever, U. By this arrangement the wheels B B′ may be readily connected with and disconnected from the axle and the cutter-driving mechanism thrown in and out of gear with the greatest facility and without any injury to the working parts of the machine, as is frequently the case when a pinion—for instance, like O—is thrown in and out of gear with a wheel corresponding to P.

The axle Q of the wheels B B′ is fitted in bearings V V, which are suspended between pivots *s s*, the latter passing horizontally through uprights *t*, attached to the frame A. (See more particularly Fig. 3.) This arrangement admits of the bearings adjusting themselves in line with the axle in case of the springing or winding of the frame A—a contingency of frequent occurrence. The shaft M is placed or hung in similar bearings, N.

Having thus described our invention, what we claim as new, and desire to secure by letters patent, is—

1. The combination of the two reciprocating cutters I I′, both acting against central tongues, *g*, placed between them in the fingers H, as herein shown and described.

2. Operating the cutters I I′ through the medium of the double-geared vibrating segment J and the racks *j j* on the bars *k k* of the cutters I I′, substantially as described.

3. The wheel P, placed on the clutch S, which is fitted on the axle Q, and arranged, as shown, with or without clutch T, for throwing the cutter-driving mechanism in and out of gear with the wheel or wheels B B′, without moving or adjusting the cutter-driving gearing, as set forth.

4. The adjustable bearings V V N N for the axle Q and shaft M, when constructed and applied to the frames of harvesters for the purpose specified.

J. W. PRENTISS.
E. M. BIRDSALL.

Witnesses:
HIRAM BIRDSALL.
L. A. CHASE.

(Here follows diagram marked p. 591.)

592 UNITED STATES PATENT OFFICE.

JACOB W. STOUT, of Raritan, New Jersey.

Improvement in Harvester.

Specification forming part of Letters Patent No. 35479, dated June 3, 1862.

To all whom it may concern:

Be it known that I, Jacob W. Stout, of Raritan, in the county of Somerset and State of New Jersey, have invented a new and im-

J. W. Stout. 591

Mower.

No. 35479 Patented. June. 3. 1862.

No. 1044
Plano Mfg. Co.
v.
Graham et al
p. 591

Fig. 1

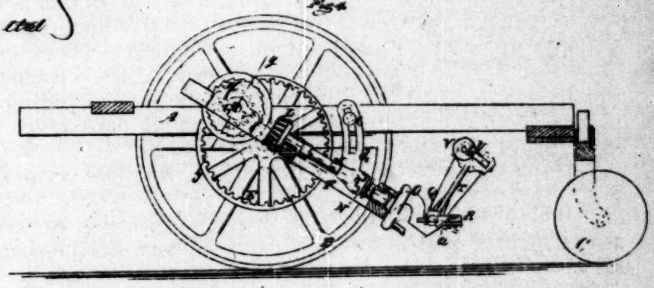

Fig. 2

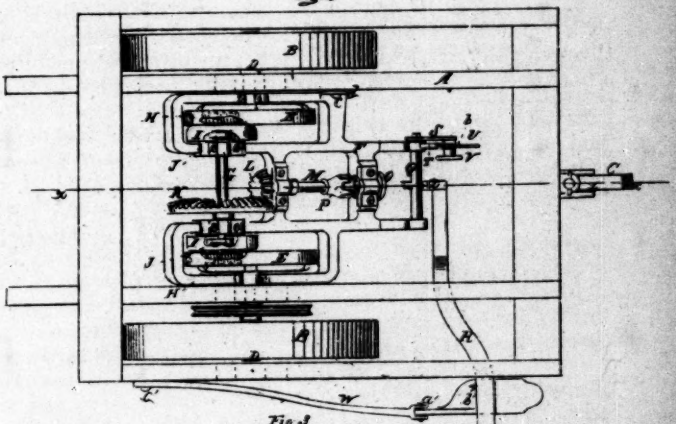

Fig. 3

Jacob W. Stout
per Munn & Co
Attorneys

proved reaping and mowing machine; and I do hereby declare that the following is a full, clear, and exact description of the same, reference being had to the accompanying drawings, making a part of this specification, in which—

Figure 1 is a side sectional view of my invention, taken in the line *x x*, Fig. 2; Fig. 2, a plan or top view of the same; Fig. 3, a section of a portion of the same, taken in the line *y y*, Fig. 1.

Similar letters of reference indicate corresponding parts in the several figures.

This invention relates to an improvement in that class of reaping and mowing machines which have their sickles and driving-gear attached to a frame which is allowed to swing on the axle of the wheels on which the main frame is mounted.

To enable those skilled in the art to fully understand and construct my invention, I will proceed to describe it.

A represents the main frame of the machine, which is supported at its front ends by two wheels, B B, and a caster-wheel, C, at its back part. The wheels B B are placed on separate or independent axles D D, to the inner ends of which toothed wheels E E are attached, one to each. These wheels E E have their teeth at the inner side of their peripheries, as shown clearly in Fig. 1, and on the axles D D of the wheels a frame, F, is hung and allowed to swing loosely, said frame being hung on the axles D at the outer sides of the wheels E E, as shown clearly in Fig. 2.

In the front part of the frame F there is placed transversely a shaft, G, which has a pinion, H, placed loosely on each end of it. These pinions gear into the wheels E E, and to each pinion there is attached a ratchet, I, the teeth of which are at the inner sides of their peripheries, and catch, when the machine is drawn forward, into pawls J J, which are attached to the shaft G, and cause the latter to rotate. In backing the machine the teeth of the ratchet slip over the pawls J J, and the shaft G consequently remains stationary.

On the shaft G there is placed a bevel-wheel, K, which gears into a bevel-pinion, L, on the front end of a shaft, M, which is placed longitudinally in the frame F, and has a sleeve, N, upon it, which is provided with a crank-wheel, O, at its lower end, from which the sickle is driven by a connecting-rod. The sleeve N is fitted loosely on the shaft M, and is connected therewith by a clutch, P.

In the back end of the frame F there is placed transversely a shaft, Q, to which the finger-bar R is connected by a short arm, *a*. The shaft Q is allowed to turn in the frame F, and to one end of it there is secured a bar, S, which extends upward by the side of a rod, T, having a sector-guide, U, at its upper end, through which a pin, *b*, on the upper end of the bar S passes, said pin having a screw-thread cut on it to receive a thumb-nut, V, by which the bar S may be firmly secured to the guide U, and the shaft Q held in proper position or prevented from turning in the frame F. By adjusting the shaft Q the finger-bar R may be secured in a more or less inclined position, and the teeth of the sickle be more or less elevated at their front ends, as the nature of the ground may require. If the ground

be rough and stony, the front ends of the teeth should be elevated as much as possible, in order that they may clear and pass over the obstructions freely. If the ground be smooth, they may be depressed at their front ends, so as to cut close. This adjustment of the finger-bar will be understood by referring to Fig. 1.

The finger-bar and sickle may be adjusted bodily at a greater or less elevation from the surface of the ground by means of a set-screw, *c*, which passes through a sector-arm, *d*, at one side of the frame F, and into the main frame A.

In consequence of having the frame F hung on the axles D D of the wheels B B, and arranged as shown, a very simple and direct driving mechanism is obtained, and one not at all affected by the adjustment of the frame F, and which admits of the machine being "backed" without operating the sickle, and at the same time causes an equal strain at both sides of the machine, which insures an easy-running movement of the sickle-driving mechanism.

I would remark that the finger-bar R has a brace, W, con-
593 nected to it. This brace is connected by a pivot, *a'*, to the front end of the inner shoe, *b'*, of the finger-bar. The front end of the brace being attached by a pivot, *c'*, to the main frame A; and I would further remark that the short arm *a*, which connects the finger-bar R with the shaft Q, is allowed to turn freely in the latter, in order to admit of the finger-bar and sickle conforming to the inequalities of surface over which they pass.

The motion of the sickle may be stopped at any time by disconnecting the sleeve N from the shaft M.

Having thus described my invention, what I claim as new, and desire to secure by letters patent, is—

The combination and arrangement of the frame F on the axles D D, of the wheels B B with the gearing E E H H, ratchets I I, pawls J J, and the bevel-gears K L, substantially as and for the purpose herein set forth.

JACOB W. STOUT.

Witnesses:
FRED. J. FRELINGHUYSEN.
JOHN D. WYCKOFF.

(Here follow diagrams marked pp. 594 & 595.)

596 UNITED STATES PATENT OFFICE.

STEPHEN S. BARTLETT, of Providence, Rhode Island, assignor to himself and THOMAS H. DODGE, of Washington, D. C.

Improvement in Harvesters.

Specification forming part of Letters Patent No. 34545, dated February 25, 1862.

To all whom it may concern:

Be it known that I, Stephen S. Bartlett, of Providence, in the county of Providence and State of Rhode Island, have invented

594

2 Sheets Sheet 1.

S. S. Bartlett,

Harvester

No. 34,545. Patented Feb. 25, 1862

No. 1044.
Plano Mfg. Co.
v.
Graham et al.
} p. 594

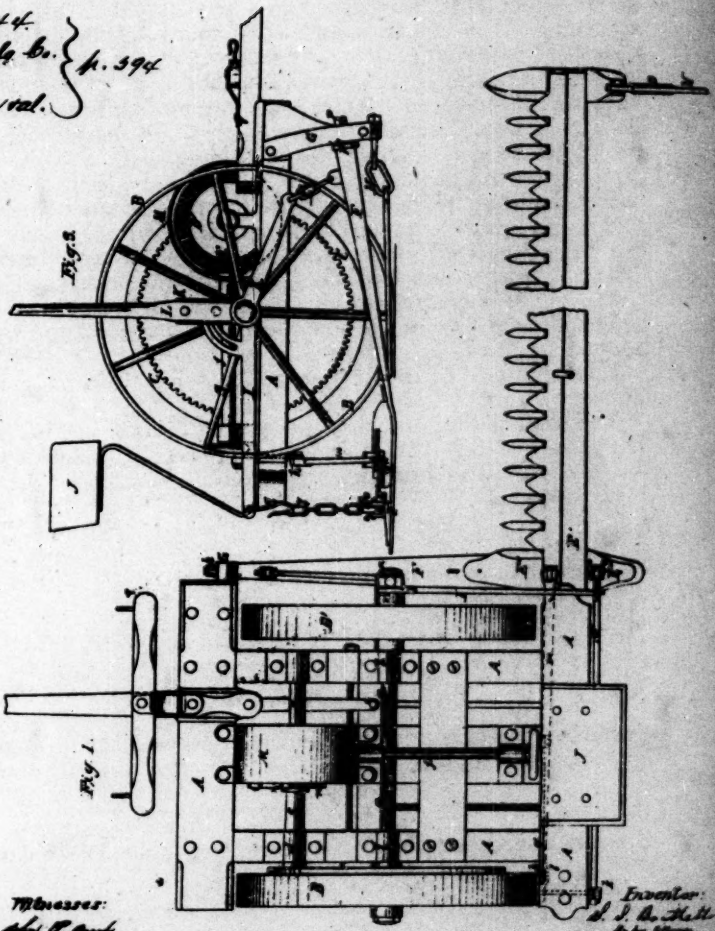

Witnesses:
John P. Gerrit
W. Bruce Lodge

Inventor:
S. S. Bartlett
by his attorney
Thos. H. Dodge

2 Sheets Sheet 2

S. S. Bartlett,

Harrester.

No 34,545. Patented Feb 25, 1862.

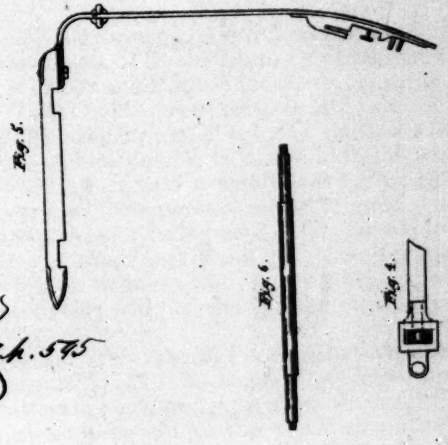

No. 1044.
Aiken Mfg. Co. v. Graham et al. h. 545

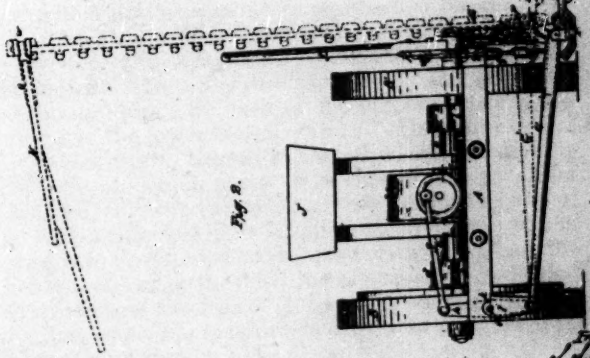

Witnesses:
[illegible]

Inventor:
S. S. Bartlett
[illegible]

certain new and useful improvements in harvesters; and I do hereby declare that the following is a full, clear, and exact description, reference being had to the accompanying drawings, forming a part of this specification, in which—

Figure 1 represents a plan view of a machine embracing my said improvements; Fig. 2 represents a rear view of said machine, the finger-beam being shown in three different positions; Fig. 3 represents a side view of the machine, the finger-beam in section; Fig. 4, a detached part in section; Figs. 5 and 6, modifications of some of the parts.

In the accompanying drawings A A A A represents the main frame, supported by two wheels, B B′, the frame being fast on axle *a*, which turns in bearings or boxes *b b*, while the latter, B′, turns loose on the end of axle *a*. To the inside of wheel B is fast a spur-gear, C, which gears into a small spur-gear on a tubular shaft, *c*, which turns in box *d*, and on one end of shaft *e*, to the middle of which is fast a bevel-gear, D, which gears into a small bevel-gear, E, on the front end of crank-shaft *f*, which operates connecting-rod *g*, connected at its outer end to the top of a rocker-arm, *h*, fast on a spindle, *i*, which is free to turn in the upper part of the metal stand *j*, and being held therein by a nut, *k*, on its rear end. To the lower end of rocker-arm *h* is hinged the swiveled end *l* of the pitman *m*, which operates the cutter-bar and cutters.

On the inner end of tubular shaft *c* is a ratchet-wheel, *n*, into which a pawl, *n′*, on the outside of the bevel-gear D, takes, so that gear D, its shaft, and the cutters are operated only when the machine advances, the ratchet-wheel slipping under the pawl when the machine is backed.

The team is to be attached to a rigid tongue, fastened to the front of the frame, and which in the drawings is represented broken off.

The heel of the finger-beam E′ is fastened in a slot in a piece, E″, fastened on the rear top of the drag-bar F, while one end of a brace-bar, G, is hinged between ears *o o* of the piece E″. The other end of said brace-bar extends along in rear of the machine, and is fast in a wrist that turns in the lower end of stand *j*. The front end of drag-bar F is inclined upward, as seen in the drawings, and having a tubular friction-collar, *p*, which plays or works in a curved slot in a metal guide-piece, G′, fastened to the inner projecting end of the main frame. A link device, H, is fastened to the lower end of G′ and also hooked into or fastened to the rear of the drag-bar, the link device H being loose when the machine is backed, as indicated in Fig. 3, and in which case the rear of G′ comes in contact with the collar part *p′* of *p*, but when the machine is drawn forward the link device is straightened, and the drag-bar draws back just enough to let collar part *p′* play free to G′, so that only the tubular part of *p* comes in contact with G′, thus obviating friction. The finger-beam thus connected to the main frame can rock or roll on a line at right angles to the line of motion of the machine, and also on a line parallel to the motion of the machine; or the finger-beam can rise bodily, or at either end, to conform to the inequalities of the ground

over which it may be drawn, and that, too, independent of the up and down motion of the main frame.

In order to prevent the heel end of the finger-beam from dropping too low, and also to enable the attendant to adjust the pressure thereof on the stubble and ground, a lever, I, is hinged at its forward end by being slipped onto the end of the shaft or axle *a*, which projects beyond the hub of wheel B′ for that purpose, while the rear end of said lever I extends back over and rests on the rear inner corner of frame A, and is provided with a hook, *q*, into which one of the links of chain *q*′ can be hooked, the lower end of the chain being fastened to the brace-bar G in any suitable manner. It will thus be seen that the height of the heel of the finger-beam can be regulated at pleasure by simply changing the hook from one link to another.

For the purpose of enabling the driver from his seat J to raise the heel of the finger-beam, or to turn up the front of the guards and drag-bar, the front end of lever I is provided with a circular slot, *s*, in which works a pin projecting from the inner side
597 of a right-angled lever-piece, K, which is also loose on shaft *a*, nut *a*′ on the end of shaft *a* preventing both levers from working off. The upper outer side of K is cast with a recess to receive the long arm or lever L, which is bolted or fastened thereto, while the outer arm K′ extends forward, and is connected to the front of the drag-bar by a chain device, L′, whereby the driver, by taking hold of the upper end of lever L and drawing it back, can elevate the front of the drag-bar to the top of the slot in the piece G′, which may be of any desired height, in this case it being quite as high as the bottom side of the frame A. This arrangement provides for elevating the points of the cutters and fingers to pass over slight elevations in the ground, while the heel of the finger-beam is sustained by arm or lever I, resting on the rear of the frame. During the above operation the pin *v* moves back freely in the curved slot *s*, but when lever L is turned in the opposite direction or forward, the pin moves back in said slot until it fetches up against its upper end, when the rear end of lever I is raised, together with the heel of the finger-beam and cutter-bar.

The chain device L′ may be arranged similarly to that of the rear end of I, so that the height or elevation of the front of the drag-bar and the fingers can be adjusted for continued use on rough or very uneven ground.

M is a shield to protect the gearing.

In Fig. 4 the outer swiveled end of the pitman is shown on an enlarged scale.

Fig. 5 represents another mode of connecting a drag-bar to the front piece of the machine, the parts being shown turned up edgewise. In the use of this device the front piece of frame A, as shown in Fig. 1, is to be removed, together with the axle *a*, and a shorter axle (seen in Fig. 6) substituted therefor. The arrangement of elevating-levers above described would in this last case be removed and not used.

The track-board N is fastened in a slot or recess in the metal

598

E. F. & J. HERRINGTON.

Mower.

No. 31,973. Patented April 9, 1861.

Fig. 1.

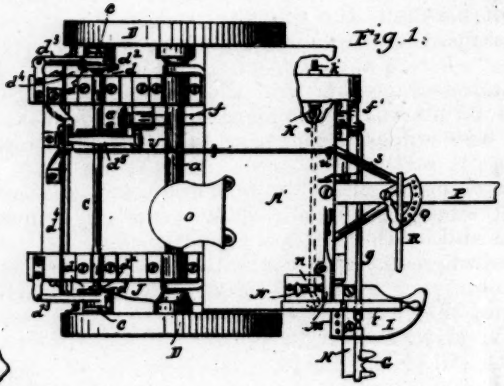

No. 1044.
Alam Mfg. Co.
v.
Graham et al
p. 598

Fig. 2.

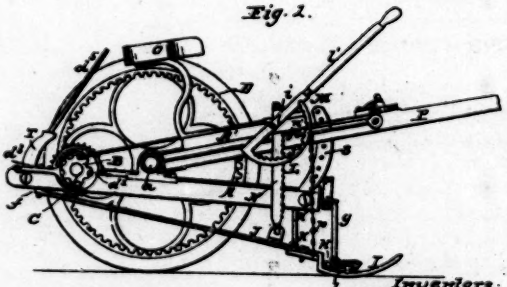

Witnesses:
Octavius Knight
James H. Nidly

Inventors:
E. F. Herrington
Per J. Herrington
Marcus Ohn
Attorneys

hinged piece O, which has a knuckle, *w*, on its lower side to strike against the shoe to which O is hinged, and thus prevent the rear end of the track-board N from falling into deep holes or from hanging down too low when the finger-beam is raised. One mode of applying said improvements has now been described.

What I claim under this patent is—

1. Supporting the rear end of a drag-bar arranged to run on the ground at the side of the machine, with its rear end free to rise and fall by means of an adjustable arm or lever, whose front end is supported by the axle or journal of the main wheels, and on the outside of the inner wheel, substantially as described.

2. The combination, with the inner end of the axle or journal of the main supporting-wheels of a grass-harvester, of an elevating arm or lever, whereby the rear end of its hinged drag-bar can be raised and lowered, together with the heel of the finger-beam, by the driver from his seat on the machine, while the elevating arm or lever has a firm support independent of the frame, substantially as described.

3. The combination of the drag-bar and compound-lever arrangement with the main frame and finger-beam of the machine, substantially as and for the purposes set forth.

In witness whereof I have hereunto subscribed my name.

STEPHEN S. BARTLETT.

In presence of—
F. W. MINER.
M. D. DRAKE.

(Here follows diagram marked p. 598.)

599 UNITED STATES PATENT OFFICE.

E. F. HERRINGTON and J. HERRINGTON, of West Hoosick, New York.

Improvement in Mowing-Machines.

Specification forming part of Letters Patent No. 31973, dated April 9, 1861.

To all whom it may concern:

Be it known that we, Ephraim F. Herrington and Josiah Herrington, both of West Hoosick, in the county of Rensselaer and State of New York, have invented certain new and useful improvements in mowing-machines; and we do hereby declare that the following is a full, clear, and exact description of the same, reference being had to the accompanying drawings, making part of this specification, in which—

Figure 1 is a plan of a mowing-machine embodying our improvements. Fig. 2 is a side elevation of the same with one wheel removed.

Similar letters of reference indicate corresponding parts in both figures.

Our said improvements consist, first, in a device for setting the fin-

ger-bar forward to compensate for its backward deflection by use, the advantage of this part of our invention being that a convenient and effective device is afforded for setting the finger-bar forward, in the event of it becoming deflected by use, without the use of braces extending in any direction beyond the main frame of the machine; second, in an appliance operating, in connection with a suitable hoisting device, to raise either the heel or the point of the finger-bar with a single lever, as hereinafter explained; third, in an appliance operating, in connection with the above, to preserve the freedom of the finger-bar to accommodate itself to undulations in the surface of the ground; fourth, in a device to vary the vertical angle of presentation of the finger-bar; fifth, in the use of spring-teeth, constructed and applied as hereinafter explained, in connection with the ratchet movement employed to permit the locking of the machine without actuating the cutting mechanism, a great advantage of this part of our invention being that the two parts of the clutch by which motion is communicated to the cutting mechanism at the option of the operator are always in contact, whether moving or not, and by this means straws and other foreign matters are effectually excluded from working between them; sixth, in a novel device operating, in connection with the said spring-teeth and their accessories, to throw the cutting mechanism out of gear.

To enable others skilled in the art to make and use our invention, we will proceed to describe its construction and operation.

A is the main frame of the machine, and A′ the draft-frame, which are secured to an axle, *a* (the latter by a hinged attachment), so as to be adjustable relatively at any angle.

D D are two driving-wheels journaled upon the axle *a*, and provided with cogs gearing with pinions B B, journaled loosely upon the main driving-shaft C, but imparting motion thereto when the machine is in gear and moving forward through the medium of clutches constructed as follows: *c c* are collars secured to the shaft C, and constructed with sockets for the reception of pins *d d*, which engage with ratchet-teeth on the inner faces of the pinions B. The said pins are pressed outward toward the pinions by means of spiral springs bearing upon shoulders on the pin *d* and collar *c*, as clearly shown in the sectional view in Fig. 1. The heads of the pins are held in disks or yokes d^2, sliding loosely upon the shaft, and adapted to withdraw the pins simultaneously from both pinions (when it is desired to throw the machine out of gear) by means of clutch-levers d^3, connecting-rods d^4, and a wedge-shaped bar, d^5, passing through slots in the ends of said rods, and operating when pressed down to draw the levers, collars, and pins toward the center of the machine.

T is a slotted standard projecting upward from the main frame to support the wedge d^5 and guide it in a proper path. Gearing *e e*, shaft *f*, crank-wheel *f′*, and connecting-rod *g* transmit motion from the shaft C to the cutter-bar G. The rod *g* is connected with the cutter-bar by a double horizontal hinge-joint, which effectually prevents any longitudinal play between them, but permits the connecting-rod to work at any angle without binding. The finger-bar H

is secured to a shoe, I, the construction of which is clearly shown in Fig. 2.

i represents a wedge-shaped plate interposed between the finger-bar and shoe, and adapted, by being reversed in position, to vary the angle of presentation of the former.

J is a metallic bar rigidly secured to the shoe, extending backward, and hinged at *j* to the rear end of the main frame.

K is a brace-rod hinged at *k* to the bar J, and extending laterally to the opposite side of the main frame, to which it is attached adjustably by a screw-bolt and nuts, as shown at *k'* in Fig. 1.

600 L is a segment pivoted at *l* to the draft-frame, provided with a hand-lever, *l'*, and adapted to raise the finger-bar at either or both ends by means of a chain or cord, *l²*, attached to the shoe or its connections.

M is a spring-catch operating in connection with ratchet-teeth on the inside of segment L to retain the latter in any position in which it may be set. N is a rack hinged at its lower end to a rigid projection from the shoe-brace J, and passing upward through a slotted plate, *n*, in the draft-frame, against the front of which the said rack is pressed with the foot when it is desired to hold down the heel of the finger-bar. At other times the rack is kept out of gear by a spring-bar, *n'*. While the rack is in this position the segment-lever L *l'* will raise only the heel of the finger-bar, the point resting on the ground; but by pressing the rack N forward with the foot the heel of the finger-bar may be held down at any desired point, and the segment-lever will then act to raise the point.

O is the driver's seat.

P is the tongue.

Q is a perforated bracket extending laterally from the tongue for the attachment of the double-tree R in any desired position to counteract the side draft of the cutting apparatus. The angle between the main frame A and draft-frame A' is adjusted by means of a perforated standard, S, extending upward from the front of the former, and supporting it at any height by a pin, *s*, inserted through the said bar into the tongue. By this means the connecting-rod may be adjusting to work in line with the cutter at any height of the latter. A stop-pin (represented by a dotted circle in Fig. 1) projects upward from the shoe I, immediately beneath the connecting-rod *g*, for the purpose of supporting the cutter when turned up to a vertical position. When it is desired to convey the machine from place to place without using the cutting mechanism, the pin *s* is first withdrawn and the segment-lever L *l'* and foot-rack N employed to raise the finger-bar nearly to a vertical position. The rack N is then withdrawn, and the continued motion of the lever causes the rod K to engage beneath the frame A, and draws the latter closely up against the frame A', where it is held by means of the catch M. When the finger-bar is thus raised to a vertical position, the cutter-bar slips through its guides until it rests upon the pin in the shoe, previously referred to. The finger-bar is inclined over the frame and there supported by means of a bar, U, hinged to the main frame at *u* for this purpose.

Having thus described our invention, what we claim as new, and desire to secure by letters patent, is—

1. The adjustable lateral brace-rod K, applied and operating in connection with the shoe-brace J, substantially as and for the purposes set forth.

2. The foot-rack N, operating in combination with the segment L, or other suitable hoisting device, to hold the heel of the finger-bar while raising the point as explained.

3. The spring-bar n', operating to hold the aforesaid foot-rack out of gear, when not in use, to permit the finger-bar to rise and fall freely with the uneven surface of the ground.

4. The reversible wedge-shaped plate i, applied between the finger-bar and shoe, in the manner and for the purpose explained.

5. The combination of the spring-pins d, disks or yokes d^2, bosses c, and loose ratchet-pinions B, operating in the manner and for the purposes explained.

6. The wedge d^5, operating in connection with rods d^4, clutch-levers d^3, and yokes d^2, to retreat the pins d.

EPHRAIM F. HERRINGTON.
JOSIAH HERRINGTON.

Witnesses as to Ephraim F. Herrington's signature:
OCTAVIUS KNIGHT.
L. W. BENDRÉ.

Witnesses as to Josiah Herrington's signature:
PARKER H. BOSWORTH.
J. OSCAR JOSLIN.

(Here follows diagram marked p. 601.)

602 UNITED STATES PATENT OFFICE.

O. BILLINGS, of La Grange, Ohio.

Improvement in Grain and Grass Harvesters.

Specification forming part of Letters Patent No. 33691, dated November 12, 1861.

To all whom it may concern:

Be it known that I, O. Billings, of La Grange, in the county of Loraine and State of Ohio, have invented certain new and useful improvements in grain and grass harvesters; and I do hereby declare that the following is a full, clear, and exact description of the same, reference being had to the annexed drawings, making a part of this specification, in which—

Figure 1 is a side view of my invention; Fig. 2, a back view of the same; Fig. 3, a side sectional view of the same, taken in the line x x, Fig. 2.

Similar letters of reference indicate corresponding parts in the several figures.

601

O. BILLINGS.

Mowing Machine.

No. 33,691. **Patented Nov. 12, 1861.**

Fig. 1.

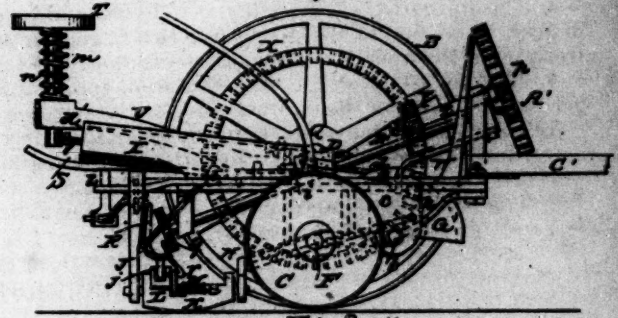

Fig. 2

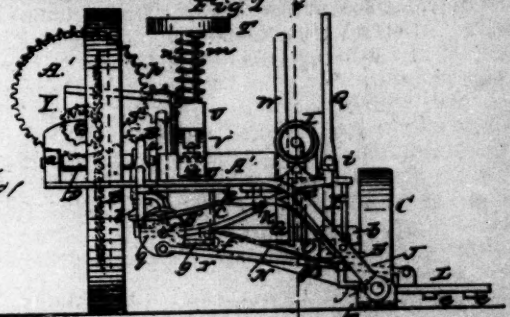

No. 1044
Plano Mfg. Co.
v.
Graham et al.
} p. 601

Fig. 3

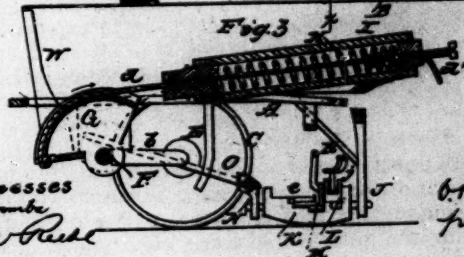

Witnesses
J. W. Lombe
G. W. Reed

Inventor
O. Billings.
per Munn & Co
attorneys.

To enable those skilled in the art to fully understand and construct my invention, I will proceed to describe it.

A represents a frame which has a driving-wheel, B, placed in one side of it, and a track-wheel, C, at its opposite side. The driving-wheel B is placed on a fixed axle, D, or rather on an axle which works in fixed or stationary bearings *a a*, while the track-wheel C has its arm or axle E at the end of crank *b*, which is at one end of a shaft, F, that is placed or fitted in suitable bearings, *c*, underneath the front part of the frame A.

On the shaft F there is a segment, G, to which a cord or chain, *d*, is attached, and this cord or chain is connected to a spiral spring, H, which is fitted within a horizontal tube, I, on the frame A, the cord or chain being attached to a set-screw, *d'*, at the back end of the spring, and by adjusting this screw the tension of spring H may be regulated as desired.

To the under side of the back part of frame A there is attached a curved bar, J, the lower end of which serves as a bearing for the back journal of a shoe, K, at the inner end of a finger-bar, L. This finger-bar may be of usual construction, and also the fingers *e*, which are attached to it. M is the sickle, which is of the ordinary reciprocating kind, and fitted on the fingers *e*. The front end of the shoe K has a journal fitted in the end of a bar, N, which is attached at its inner end by a joint, *f*, to a fixed bar, *g*, underneath frame A. The bar N, near its outer end, is fitted on the back end of a rod, O, the front end of which is attached by a joint, *h*, to the under side of frame A. The rod O passes through a pendant, P, which extends up through the frame A, passes through the lower part of a lever, Q, and has a nut, *i*, upon it. By adjusting or turning the nut *i* the front part of the shoe K, and consequently the front part of the finger bar and sickle, may be more or less elevated, as circumstances may require. In case the front part of the sickle or fingers require to be temporarily raised, it may be done at any time by drawing down the upper end of lever Q.

The inner end of the finger-bar L has a friction-roller, *j*, applied or attached to it, and upon this roller the outer end of a spring, R, bears. This spring R partakes of the character of a lever, and has its fulcrum at *k*. The inner end of this spring R is connected by a link, *l*, with a lever, S, the rear end of which is within convenient reach of the driver, who is on his seat T. The seat T is simply a disk having a pendant rod or guide, *m*, attached, on which a spiral spring, *n*, is placed. The rod or guide *m* passes through the outer part of a bar, U, the front end of which is attached by a bolt, V, to the frame A. The bar U is allowed to turn on this bolt V, and to facilitate the turning of said bars, a friction-roller, *o*, is inserted in it, said roller resting on the frame A. The spring *n* allows the seat to yield or give readily, and in consequence of the arrangement of the bar U the driver is enabled to shift his position from right to left, as occasion may require.

The segment G of shaft F has a lever, W, connected to it, by operating which the driver may at any time raise the right side of the main frame, and consequently the finger-bar and sickle, so that

the latter may pass over obstructions which may lie in its path. The outer end of the finger-bar is of course allowed to rise and fall to conform to the inequalities of the surface of the ground, and the inner end of the finger-bar is allowed a similar movement, in consequence of the arrangement of the track-wheel C on its crank-axle E. The spiral spring H, connected to the segment G by the cord or chain *d*, serves as a counterpoise and greatly facilitates the yielding movement of the finger-bar and sickle, and by regulating the tension of spring H the pressure of the finger-bar on the earth may be regulated as desired.

The driving-wheel B has a concentric toothed rim, X, at its outer side, which rim gears into a pinion, Y, on a shaft, Z. On
603 the front end of this shaft Z there is placed a toothed wheel, A′, which gears into a pinion, *p*, said pinion being at the front end of a shaft, B′, which is fitted in the frame A at the inner or right-hand side of the wheel B. The back end of the shaft B′ is provided with a crank-pulley, *g*, from which the sickle M is driven by a rod, *r*. This arrangement of the sickle-driving mechanism has a tendency to prevent side draft, as the power is taken from the driving-wheel at its left side, and consequently is as far to the left side of the draft-pole C′ as possible, and therefore serves to counteract the resistance offered by the grain or grass to the cutting action of the sickle. The spring R effects two important results: First, it serves to keep the outer part of the finger-bar and sickle elevated or from bearing too heavily on the ground; and, second, it admits, when pressed down on the inner end of the finger-bar through the medium of lever S of the finger-bar and sickles, being raised bodily when the lever W is drawn back. This latter, it will be seen, is quite an essential feature of the invention.

Having thus described my invention, what I claim as new, and desire to secure by letters patent, is—

1. The attaching of the front end of the shoe K of the finger-bar to the adjustable bar N, which is connected by a pendant, P, to the lever Q, as shown and described, for the purpose of regulating the height of the front ends of the fingers *e*, as set forth.

2. The arrangement of the spring lever R relatively with the lever S and finger-bar L, as shown and described, whereby the weight of the outer part of the finger-bar and sickle is counterpoised, or nearly so, and whereby said finger-bar and sickle may be raised bodily when required, in order to pass over obstructions.

3. The arrangement of the crank-axle E, of the track-wheel C, segment G, and spring H, substantially as and for the purpose specified.

O. BILLINGS.

Witnesses:
N. P. JOHNSON.
GEO. C. UNDERHILL.

(Here follow diagrams marked pp. 604, 605, & 606.)

Sheet 1-3 Sheets.

C. Wheeler, Jr.

Mower.

Patented Mar. 12, 1861.

No. 682
No. 31686

No. 1044.
Plano Mfg. Co.
v.
Graham et al.
p. 604

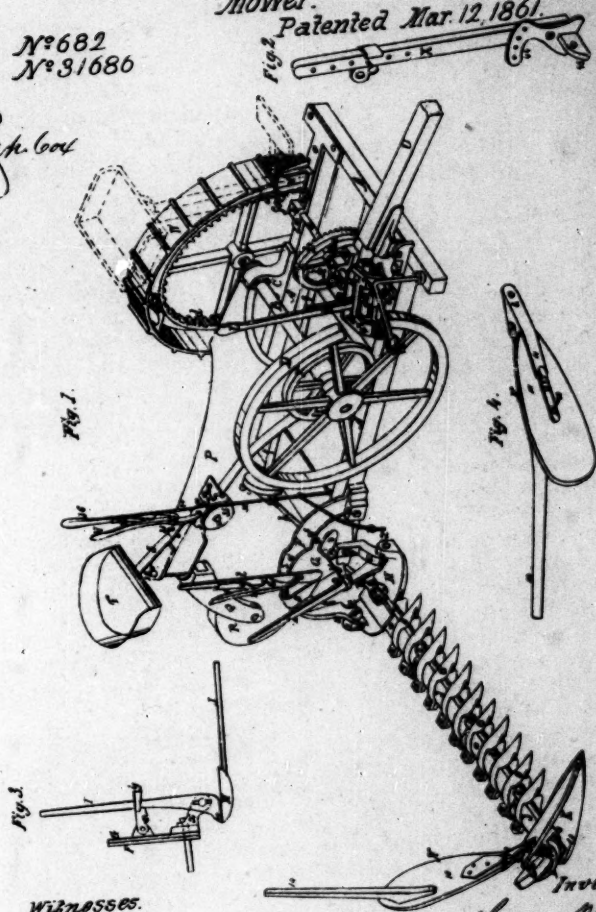

Witnesses.

E. Cohen
J. Hirsch

Inventor.

Cyrenus Wheeler Jr.
by Atty A.B. Croughton

Sheet 3 - 3 Sheets.

C. Wheeler, Jr.

Mower.

No 682
No 31686

Patented Mar 12, 1861.

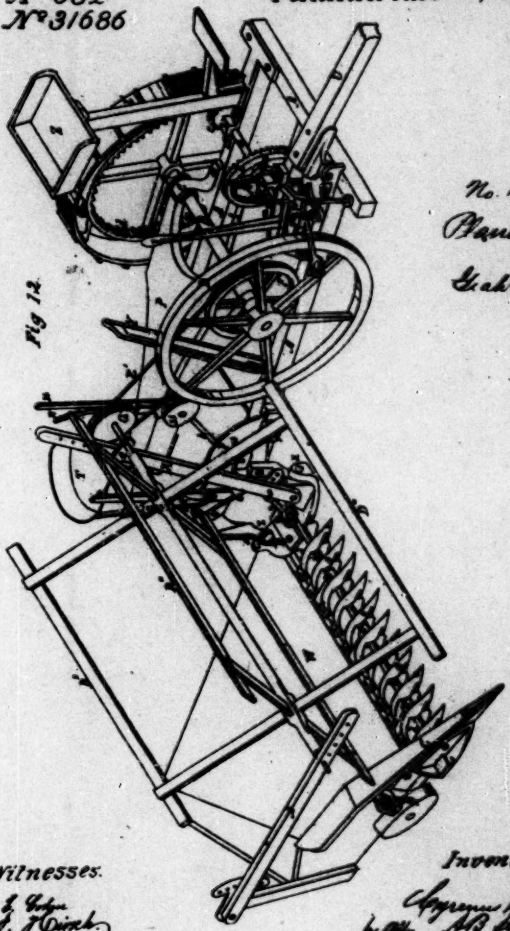

Fig 12.

No. 1044.
Plano Mfg. Co. } p. 606
v.
Graham et al.

Witnesses.
E. Cohen
J. Hirsch

Inventor.
Cyrenus Wheeler Jr
by Atty A.B. Stoughton

607 UNITED STATES PATENT OFFICE.

CYRENUS WHEELER, Jr., of Poplar Ridge, New York.

Improvement in Reaping and Mowing Machines.

Specification forming part of Letters Patent No. 31686, dated March 12, 1861.

To all whom it may concern:

Be it known that I, Cyrenus Wheeler, Jr., of Poplar Ridge, in the county of Cayuga and State of New York, have invented certain new and useful improvements in combined mowing and reaping machines; and I do hereby declare the following to be a full, clear, and exact description of the same, reference being had to the accompanying drawings, making a part of this specification, in which—

Figure 1 represents a perspective view of the machine when arranged for mowing grass. Figs. 2, 3, 4, 5, 6, 7, 8, 9, 10 represent details of the machine, which will be hereinafter referred to. Fig. 12 represents in perspective the machine as arranged for reaping grain. Fig. 11 represents in perspective the machine (when arranged for mowing grass) as having its finger-bar folded up for transportation from place to place.

Similar letters of reference, where they occur in the several figures, denote like parts of the machine in all of the drawings.

This invention relates to a combined reaping and mowing machine convertible to either purpose and embracing the necessary elements to adapt it to either use. The leading characteristics of the machine are the subject-matter of letters patent heretofore granted to me; and this invention consists in the details of the machine, which may be briefly enumerated as follows: the arrangement for folding the cutter and finger-bar, the manner of hanging the seat-frame and the main frame to the axle of the machine, the clutching and unclutching devices, the device for keeping the reel-belt on its pulleys, the hinged hook and latch for catching in one position and locking in another position, the lever and the finger-bar, the manner of hanging the outside caster-wheel, the lock on the track-clearer for making it yielding or rigid, and the plate under the cutters and the method of holding it there. I thus briefly enumerate the points in the invention to which I propose to extend my claims, but will hereinafter more fully and specifically point out their construction and combinations with each other, and with the machine generally, to effect the objects for which they are designed.

To enable others skilled in the art to make and use my invention, I will proceed to describe the same with reference to the drawings, and first as adapted to mowing grass.

A rectangular frame, A, is suspended to the axle B by suitable boxes, C, so that it may swing on said axle. On this axle B, and outside of the frame A, are the two main carrying and supporting wheels D D′, the latter, D′, being also a driving-wheel, and for this purpose revolving with the axle, while its mate or fellow, D, is loose on and may turn independent of the axle.

On the front part of the main frame A there is a shaft, *a*, supported in boxes *b*. One end of this shaft has upon it a pinion, *c*, that gears with the cogs *d* of the drive-wheel D′, and thus a rotating motion is communicated to this shaft *a*, and through it to the cutters, as follows: A bevel-gear wheel, E, on the shaft *a* meshes with a bevel-pinion, *e*, on a shaft, *f*, that extends rearward and inclines downward and rotates said shaft *f*. The shaft *f* has a crank-wheel, *g*, on its extreme rear end, and to a wrist-pin in this crank-wheel the pitman *h* is attached by one of its ends, the other end thereof being connected to the cutter-bar *i*, and through this gearing the cutter-bar is vibrated. In order that the cutter-bar may be at rest when the machine is not cutting grass or grain, I have arranged a clutching and unclutching apparatus for engaging or disengaging the bevel-wheel E and the bevel-pinion *e*, as follows: A plate, *j*, is bolted to the main frame, in the top of which there is an oblique slot, *k*, that has a recess at both ends of it, so as to receive and hold a lever, *l*, that works through said slot when said lever comes opposite either of said recesses, it being thrown and held in them by a spring, *m*, upon its side, that presses it in that direction. Underneath the slot there is a way, *n*, that inclines in the same direction with said slot, and upon this way *n* a carriage-plate, *o*, is moved, that has a flange, *p*, upon it, that projects into a groove formed in the axle or shaft *a*, so that sliding the plate *o* obliquely moves the shaft endwise, drawing it away from or forcing it up to the pinion *e*, as the case may be, and in either case the lever is held at the end of its motion by one or the other of the recesses in the oblique slot *k*, into which it is thrown by its spring *m*. To move the lever it is first forced against its spring *m* until it leaves the recess, then moved in the direction of the slot.

At the rear end of the main frame, and on the grain side thereof, there is bolted a plate, F, and to this plate, or through it, and
608 to the main frame is pivoted by a pivot-bolt, *q*, a movable plate, G, that is in contact or close proximity to the stationary one F. The plate G, to cause it to move freely on its pivot without being shackling, moves through a guide-piece, *r*, at its front, and has a restraining-piece, *s*, toward its rear, which steadies it to the rigid plate F. To an upright piece, *t*, connected to the moving plate G, there is pivoted a lever, *u*, with a spring, *v*, behind it. The lower end of the lever is bent into a hook form, and passing through an opening in its own plate will catch, if unrestrained, into one of the series of holes, 1 2, &c., in the stationary plate F, and thus lock the two plates together. By slipping a ring over the upright *t* and over the lever *u*, so as to hold them close together, this rocking cannot take place, and then the plate G can move on its pivot until its shoulder *w* comes against a pin set in the hole 3, where it is stopped, that pin being at a point where it will catch the finger-bar before the points of the fingers would be apt to run into the ground by their downward inclination. The plate G has other devices connected with it—viz., the projections *x x*, to which the shoe H is pivoted, and a hinged hook and latch, *y*, which holds the lever I in two positions, as will be described hereinafter. The shoe H is pivoted to the arms or projections *x x* at *z z* through the lugs 1 2 at its front and rear, and the

finger-bar J is connected to the shoe by means of a recess, and bolts or rivets to give it the proper degree of strength. To the outer end of the finger-bar is attached the outside divider K. This divider has a recess, 3, Figs. 1, 7, 8, in it, in which is secured a plate, 4, having horizontal lugs 5 on it, through which an inclined pivot-pin, 6, passes to form a hinge for the curved shank L, to which the outside caster-wheel, M, is hung. When the machine is drawn forward, the caster-wheel and its curved shank swing backward and behind the path of the divider K, as seen at Figs. 1, 7, which allows the finger-bar and its several appliances to come down close to the ground; but when the machine is being "geed around," the caster and its shank swing into the position shown in Fig. 8, which raises up the shoe or divider and outer end of the finger-bar, as shown by the comparative height of the divider above the horizontal line under the casters in Figs. 7 and 8. I use but one shank for my caster-wheels, said wheels being hung to the side of the shank. This enables me to more readily clear the caster of any straw or grass that may wind around and choke it.

To the rear end, 7, of the outside divider X is bolted or pivoted the track-clearer N, which is made as follows: a metallic shoe-piece, 8, at its point, by which it is secured to the divider K. This shoe-piece has flanges or lugs 9 turned upon it, through which a vertical pivot passes to form a hinged connection between said shoe and the vertical (or nearly so) board 10. The back of the shoe-piece 8 extends rearward and forms a shank, 11, which lies snugly up against the board 10. On the outside of the board 10 there is a pivoted catch, 12 (see Fig. 4), which, when let down upon its stop 13, overlaps the shank-piece 11, and thus makes the shoe and board rigid, and as though made of one piece; but by raising up the rear end of the catch-piece 12 to a vertical (or nearly so) position it releases the catch-piece and the board will swing freely in one direction—viz., away from the standing grass—on its hinged connection. The track-clearer may thus be a rigid or a hinged one, as may be preferred, or as its special duty may require. 14 is the handle by which the track-clearer may be handled or moved. The object of the track-clearer is too well known to need any further description of it.

o are the fingers or guards on the finger-beam J, and 15 are the guides thereon for the cutter-bar *i* to work through. The construction of the guard and the action of the cutter therein will be more clearly understood by reference to Fig. 10, where an enlarged sectional view of a guard and its several parts is seen. The guard is cast in two pieces—an upper one, 16, and a lower one, 17—each having projections and recesses, as seen in said Fig. 10. In a recess in the lower part, 17, is placed what I term a "cutter-plate," 18, resting upon its lugs 19 in said recess. The upper portion, 16, after the lower portion, 17, is bolted to the finger-bar, as at 20, and the cutter-plate laid in, has its point 21 slipped under the cap 22, and then brought down until its rear 23 comes upon the rear portion, 24, of the under part, where the two parts are bolted together, as at 25. The projection 26 rests upon the heel of the cutter-plate, keeping it firmly in place, and the other one, 27, rests behind the finger-bar,

so that the two bolts 20 and 25 hold the fingers to the bar and its parts to each other, and also the cutter-plate in its proper position, leaving room for the cutter-bar and its knives to freely play through. The object of the cutter-plate is to make a sheer edge, as it were, for the cutters to cut against. This construction and connection of guards affords easy access, removal, replacement, or repair of any of its parts or appliances.

P is a second frame, hinged to the axle at 28 and extending rearward and over the rear portion of the main frame. At the rear of this second frame is pivoted by a vertical pivot, 29, the shank Q, which has connected to it the caster-wheel R, this caster-wheel, like the one, M, above described, being hung to the side of the shank to facilitate the removal of any straw or grass which may wind around its journal or between it and its shank, which will occur notwithstanding the greatest precaution to avoid it. This caster-wheel may be also so hung as to slightly raise up its frame when the machine is being turned around and let it down again when the machine starts forward; and as the main frame is sometimes
609 suspended to this second frame, this raising and lowering may be important. To the second frame, P, is pivoted at 30 the seat-support S, which carries the seat T, and by a series of holes and a pin, 31, the position of the seat may be varied to allow the driver to face the team or the cutters, whichever requires his attention most. A plate, 32, is bolted to P, which has a journal, 33, projecting from it, and a ratchet-arc, 34, fastened to it. On the journal 33 is placed, so as to turn freely thereon, when required, a pulley, 35, and a post or upright, 36, fastened to it; and to this post or upright 36 is pivoted a lever, 37, the hooked end of which passes through an opening in the standard or post and takes into the ratchet-teeth on 34, it being thrown in that direction by the action of the springs 38. A chain, 39, which is fastened to the main frame, is hooked to the pulley 35, so that the operator by seizing the lever and upright can raise or lower the main frame at pleasure. When the main frame is suspended to the second frame, P, they can only move together upward by anything coming under the rear caster, R; but the flexibility of the chain 39 will allow the main frame to rise independently of the rising of the second frame, though suspended to it; and when the main frame is let down and the chain slackened, either frame may move on the axle independent of the other.

The lever I, Fig. 3, has a foot, 40, on it, which bears upon the top of the shoe H. By seizing this lever and drawing it toward the main frame the driver or operator may raise up the outer end of the finger-bar, and the latch 41, catching over a pin in the lever, will hold it thus raised up. The hook *y* keeps the lever up within reaching distance of the operator from his seat. The lever *u* and post *t* are for raising or lowering the points of the fingers. When the finger-bar is to be folded up into the position shown in Fig. 11 for transportation, it may be first raised up into a perpendicular position, the pin is drawn from the hole 3, the lever *u* is pulled back to its post *t*, and the plate G, to which the finger-bar is pivoted, is

free to turn forward, and the finger-bar with it, until the point of the outside divider K rests in a supporting arm, 42, on the front of the frame A, where it will ride well balanced, the arm 42 preventing it from swinging in or out.

The tongue U is hinged to the front of the main frame, at one side thereof, to counteract side draft, and opposite to it, at the other corner, is a shoe, V, for receiving the post that sustains the driver's seat, as shown in red lines, when the machine is converted into a reaper, as will be hereinafter explained.

Fig. 2 represents a reel-post which is used when the machine is arranged for reaping grain, and Fig. 6 represents a caster which belongs to the grain-table. Both of these will be more particularly mentioned in describing the arrangement for reaping, and to which they properly belong.

To convert this machine from a mower to a reaper, the track-clearer N, the outside caster, M, and the lever I are removed. The grain-table W is adjusted and bolted to the finger-beam. The reel-post X, Figs. 2 and 12, is fitted on where the lever I comes off. The belt-guide Y is set in the socket prepared for it. The driver's seat Z is set in the shoe V. The platform or grain-table has upon it the outside reel-post, A′, and its inclined caster B′, and a long divider, C′, that lies up against the shoe K, but projects beyond it, and when the reel D″ is set in its supports, and the band E′ adjusted over its pulleys F′ G′, and through the guide Y, and the finger-bar set up or raised to the proper height, the machine is ready for reaping grain. The necessity of the belt-guide is this: that the outer end of the finger-bar and the platform are still free to rise and fall to the slopes of the ground, and if not controlled, the reel-shaft, moving with the platform, would throw off the belt; but the guide Y prevents it, as any end motion of the reel-shaft is not transmitted to the belt beyond said guide.

It is unnecessary to further describe in detail the construction of the parts which convert the machine from a grass to a grain cutting machine. It has all the necessary elements within itself for either work. The finger-bar can be raised or lowered at either end or at both ends. It can be turned to raise or lower the points of the guards. It can conform to the ground at one end or at both ends. It is self-yielding or flexible. It can be folded up out of the way and work with or without the grain-table.

The seat T, mounted on the frame P, serves the double purpose of a driver's seat when mowing grass, and a raker's seat when reaping grain. On the foot of the reel-post X there is a projection, 43, by which it is secured to the lug 1 on the shoe H, and also an arc, 44, furnished with holes for lowering or raising and holding the reel-post when adjusted. When the machine is arranged for cutting grass, or the reel removed, the reel-post is also taken off, and when the reel-post is on the lever I is removed.

Having thus fully described the nature and objects of my invention, what I claim therein as new, and desire to secure by letters patent, is—

1. The combination of the hinged shoe H and pivoted plate G for

allowing the finger-bar connected with said shoe to be folded to or around by the main frame, and be supported by and carried on its hinges, substantially as herein described.

2. The combination of the two frames A P, connected to the same axle, the former supporting the gearing and cutting apparatus, and the latter extending rearward, and by means of its caster supporting the driver or conductor, and a raising and lowering apparatus for raising, lowering, or suspending the frame A upon itself, substantially as described.

610 3. The combination of the pivoted plate G, carrying the finger-bar, the stationary plate F, the guides *r s*, and the lever *u* for allowing one plate to move freely and truly upon the other, and for holding them rigid when desired, substantially as described.

4. The clutching and unclutching mechanism composed of the obliquely-slotted stationary plate *j*, the inclined movable plate *o*, with its flange *p*, and the lever *l*, arranged substantially as described.

5. In combination with a hinged finger-bar and platform that are free to rise and fall at their outer ends, and that carry the reel-supports, a belt-guide on the main frame, to prevent the end motion of the reel-shaft from throwing the belt off from its driving-pulleys, substantially as described.

6. In combination with the pivoted lever I, and its catch-pin, and foot 40, resting upon the shoe H, the hinged hook and latch *y* for catching in one position, and holding the lever and the finger-bar in another position, substantially as described.

7. The manner of holding the cutter-plate 18 in place by means of its own projections and those upon the upper part of the finger, substantially as described.

8. Hanging the casters to one side of a shank that is in turn hinged by an inclined pivot-pin, so that they will freely swing around to ease the machine in turning, and be easily got at to be cleaned of all grass or straw that may wind around them or their journals, substantially as described.

9. In combination with a hinged track-clearer, the lock 11 12, for the purpose of making said track-clearer rigid or flexible, as occasion may require, substantially as described.

CYRENUS WHEELER, JR.

Witnesses:
A. B. STOUGHTON.
E. COHEN.

(Here follows diagram marked p. 611.)

Lomont & Grojean, Mower.

No. 27841. Patented. Mar. 27. 1860.

No. 1044.
Plaus Mfg. Co.
v
Graham et al.
} p. 611

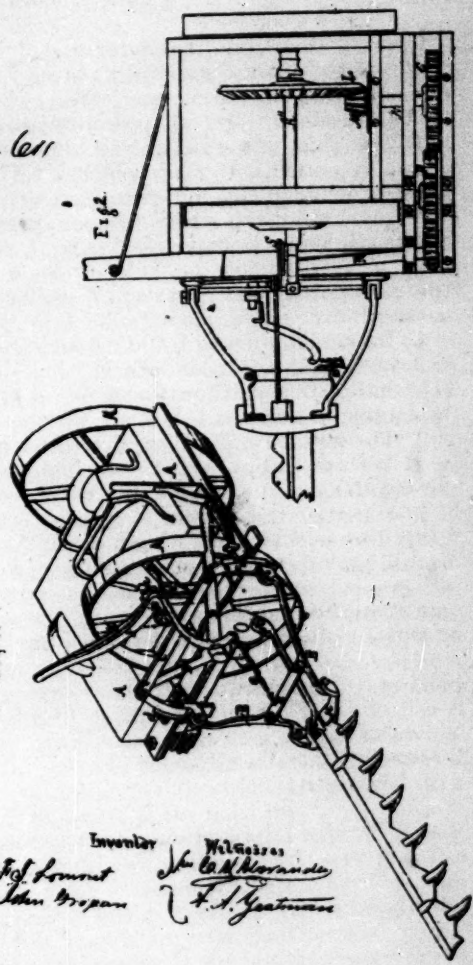

Inventor
F. J. Lomont
John Grojean

Witnesses
John C. M. Alexander
F. A. Gentman

612 UNITED STATES PATENT OFFICE.

F. T. LOMONT and JOHN GROJEAN, of Massillon, Ohio.

Improvement in Reaping and Mowing Machines.

Specification forming part of Letters Patent No. 27641, dated March 27, 1860.

To all whom it may concern:

Be it known that we, F. T. Lomont and John Grojean, of Massillon, in the county of Stark and State of Ohio, have invented certain new and useful improvements in reaping and mowing machines; and we do hereby declare that the following is a full, clear, and exact description of the same, reference being had to the accompanying drawings, and to the letters of reference marked thereon.

The nature of our invention consists in the arrangement of those parts together which will be hereinafter particularly described.

In the annexed drawings, Figure 1 represents a perspective view. Fig. 2 represents a bottom view.

In the figures, A represents the frame of the machine, which may be made in any convenient and suitable manner. This frame is supported by means of two wheels, A′ A,′ which are secured upon an axle, A″. Upon the axle A″ is also secured a bevel-wheel, L, which works into a bevel-pinion, M, secured upon one end of a shaft, N. Upon the other end of shaft N is secured a gear-wheel, O, which works into an idle-wheel, P, said idle-wheel working into a pinion, Q, secured upon a shaft, R. To one end of shaft R is secured a disk or wheel, which has a pin on one face, near its periphery, to which one end of a pitman is attached, the other end of said pitman being attached to the cutter-bar. By means of these various connections the cutter-bar is driven with proper speed from the main axle A″. The cutter-bar may be driven by this arrangement of wheels, or it may be driven by a simpler and more easy connection of wheels, or in any desired manner, as this forms no part of our invention.

H represents the shoe, which is hinged to the braces B B at front and rear, as is fully represented in the drawings. The braces B B are secured and hinged at their other ends to a curved or arched bar, C. This bar C is so curved and constructed at its ends that it slides in dovetailed grooves in boxes *d d*, which are secured to a beam forming a portion of the frame of the machine.

D represents an angular bar, through which the axle A″ passes, and serves as a fulcrum for said bar when it acts as a lever, and also as a support to the bar. The bar D is secured to the bar C at two points, as seen at *x x*, said bar D being provided with a handle by means of which the operator may change its position, and consequently the position of the curved bar C, thus giving any desired inclination or set to the cutter-bar, finger-bar, &c.

The braces B B are connected together by means of a cross-piece, *e*. To this cross-piece *e* is secured one end of a cord or chain, *a*,

the other end of said cord or chain being attached to one end of a lever, J. A small shaft, *i*, passes through the lever J and forms a fulcrum on which it turns. *h* represents a ratchet-wheel, which is secured upon the shaft *i* permanently. *k* represents a bar, which is secured to lever J by means of a spring. One end of this bar catches between the teeth on the wheel *h*, and thus serves to hold the said lever in any desired position. By bearing down the lever J the cord *a* draws the cutting apparatus up from the ground, so as either to regulate the height of cut or to raise it above obstacles in removing it from one point to another.

By means of the bars D and C the cutting apparatus may be inclined up or down for mowing or reaping, or for adapting it to uneven ground, just as circumstances may require it.

I am aware that the cutting apparatus of the harvester has been hinged to the coupling arms, which are in turn hinged to the main frame; also, that the hinged cutting apparatus has been suspended upon the main shaft of the driving-wheels, so as to be capable of adjustment thereon. These features we do not claim; but

What we do claim, and desire to secure by letters patent, is—

The arrangement of the hinged frame, consisting of braces B B and cross-piece, *e*, in combination with segmental adjustable frame C, levers D and J, and chain *a*, all the parts constructed and applied in the manner and for the purpose specified.

F. T. LOMONT.
JOHN GROJEAN.

Witnesses:
THOS. BLACKBURN.
GEORGE CARNE.

(Here follows diagram marked p. 613.)

614 UNITED STATES PATENT OFFICE.

GEORGE E. CHENOWETH, of Baltimore, Maryland.

Improvement in Harvesters.

Specification forming part of Letters Patent No. 26091, dated November 15, 1859.

To all whom it may concern:

Be it known that I, George E. Chenoweth, of Baltimore, in the State of Maryland, have invented an improved mode of hanging the cutter-bar of harvesters; and I do hereby declare the following to be a correct description of the same, reference being had to the accompanying drawings, in which—

Figure 1 is a plan or top view, and Fig. 2 is a side elevation, of the machine. Fig. 3 is an end view of the frame and bar from the rear of the machine.

The nature of my invention consists in hanging the cutter-bar to the main frame in such a manner that the bar can be folded into a line parallel, or nearly so, to the line of draft and hung upon the

G. E. CHENOWETH.

Harvester.

No. 26,091. Patented

No. 1044.
Plano Mfg. Co.
v.
Graham et al.
p. 613.

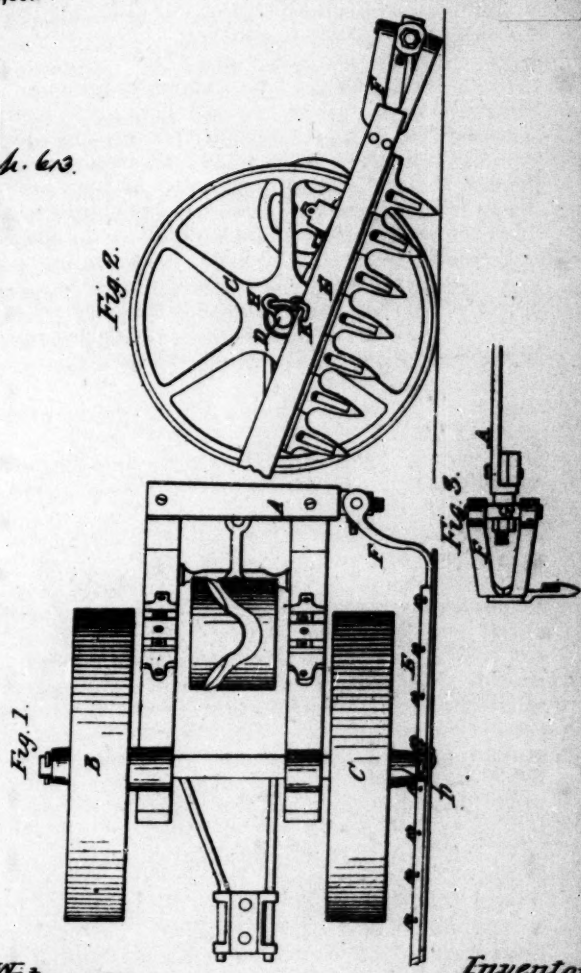

Witnesses:
Chas. F. Gansberg
Elias A. Brown

Inventor:
Jas. E. Schenoweth

axle of the inside wheel, or be allowed to trail behind the machine, in the manner hereinafter more particularly described. The folding of the cutter-bar is found in practice to be a matter of so much convenience in the transportation of the machine from place to place, in passing through gates and narrow lanes, and over rough roads, that many plans have been devised by inventors to accomplish it. One of the earliest of these was that of hinging it to the frame in such a way that it could be folded into an upright position. This was liable to the objection of making the machine top-heavy and very apt to upset. Another plan placed the cutter-bar across the machine, upon the top of the main frame, and at right angles to the line of draft. In a third machine the bar is turned, after being lifted, so as to lie in between the wheels, on top of the main frame and in the line of draft. These latter modes are objectionable because they do not distribute the weight advantageously between the wheels. The outside, or "ground wheel," as it is termed, is usually much heavier than the inside one, by reason of its carrying the cogs, cams, or other devices by which the cutters are driven. By my arrangement this difference of weight is much lessened, if not wholly counteracted, and the draft rendered more even and easy. The folding also is done by one motion, and can easily be performed by one person without assistance.

In the drawings the same part is marked in all the figures by the same letter.

A denotes the main frame; B, the outside wheel; C, the inside wheel; D, the axle of wheel C; E, the cutter-bar; F, the fork by which the bar is attached to the frame; G, cross-head to which fork F is hinged; H, chain, and K hook by which the bar is hung to the axle of wheel C.

The cross-head G is pivoted to the main frame, so as to swivel freely. The fork F being hinged to its end, the two form a universal joint, allowing the necessary freedom of motion to the cutter-bar, which may either trail on the ground behind the machine, in the line of the inside wheel, or be folded forward and hung to the axle of that wheel by the hook and chain, as shown. There is a hole in the bar to receive the hook K. One advantage of this arrangement is the great convenience with which the folding can be done, only one hand being required to effect it, there being no necessity to lift the bar and platform over the wheel. A further advantage is that the platform remains attached to the bar when folded to this convenient position, which is not the case in the only other machine in which the bar is folded to the wheel, the bar in that case being folded backward and retaining its original plane. The guards, moreover, by my arrangement, being pointed downward and slightly inward, are out of the way of doing or receiving injury.

Having thus described my invention, I wish it to be understood that I do not claim folding the cutter-bar across the frame at right angles to the line of draft; nor do I claim folding it between the wheels in or nearly in the line of draft. Neither do I claim folding the bar so as to rest upon any portion of the main frame. I do not

claim broadly folding the bar up to the side of the wheel and supporting it by attachment to the end of the axle-tree; but

I claim—

The described arrangement and combination of the finger-bar and main frame, whereby the bar can be folded forward to the side of the machine, with its front downward, so that the platform can remain attached to the bar and occupy a vertical plane therewith when folded to this position, all as described, and represented in the foregoing specification and the accompanying drawings.

The above specification signed and witnessed this 12th day of September, A. D. 1859.

GEO. E. CHENOWETH.

Witnesses:
CHAS. F. STANSBURY.
EDM. F. BROWN.

(Here follows diagram marked p. 615.)

616 UNITED STATES PATENT OFFICE.

GEO. E. CHENOWETH, of Baltimore, Maryland.

Improvement in Harvesters.

Specification forming part of Letters Patent No. 27617, dated March 27, 1860.

To all whom it may concern:

Be it known that I, George E. Chenoweth, of Baltimore, in the State of Maryland, have invented certain new and useful improvements in harvesters; and I do hereby declare the following to be a correct description of the same, reference being had to the accompanying drawings, making part of this specification, in which—

Figure 1 is a top view or plan of my improvements, and Fig. 2 is a bottom view of a part of the cutter-bar and guards.

The same letter marks the same part in both the figures.

A marks the main frame; B, the axle-tree; C, the wheels; D, the outer arm of axle-tree; E, the end of the inner arm of the axle-tree; F, cross-piece of the main frame; G, the pivoted arm; H, trunnioned piece attached to lugs of arm G; I, hinge piece of coupling-bar; J, braces; K, coupling-bar; L, the shoe; M, the finger-bar; N, the guards; O, nut on end of finger-bar; P, chain-brace connecting shoe to end of axle; Q, chain-brace connecting coupling-bar to main frame; R, spring supporting driver's seat; *a*, lugs of arm G; *b*, trunnions of piece H; *c*, hinges of braces J; *d*, lip of guard; *e*, raising and lowering rod running through bar M.

The nature of my invention consists in new modes of constructing and connecting the finger-bar and guard-fingers, and of attaching and bracing the folding-bar to the frame, with other details of construction hereinafter set forth.

To enable others to construct and use my invention, I will proceed to describe its construction and operation.

G. E. Chenoweth, 615

Mower.

No. 27.617. Patented Mar. 27. 1860.

No. 10 44,
Plano Mfg. Co.
v.
Graham et al.
} h. 615

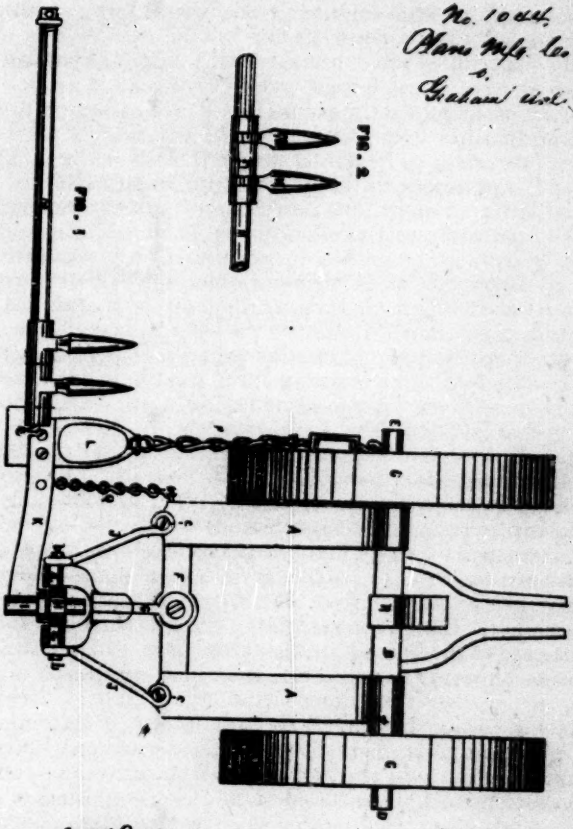

Chas. F. Pansbury
atty for
Geo. E. Chenoweth
Witnesses Granville Lewis
Mattheuspler

My improvements relate to a two-wheel machine in which the cam is used as a driving power; but they may be adapted to other kinds of machines by obvious modifications that will at once suggest themselves to a skillful mechanic.

The side pieces, A, of the main frame are attached to the axle-tree B, and have free motion upon it. They receive between them the cam from which the motion of the cutters is derived, but which is not necessary to be represented here. The pieces A are joined at their rear extremities by the cross-piece F, to which is pivoted arm G, so as to be capable of lateral movement for folding the cutting apparatus to the outside of the wheel, when braces J J are detached. This arm has two lugs, *a*, which receive the trunnions *b* of piece H, which rotates on them. The trunnion-piece H receives the hinge-piece I of coupling-bar K. The trunnions of piece H project on either side beyond the lugs of arm G, and are embraced by the braces J J, which hold the arm G firmly in place, and prevent its lateral vibration when the machine is in operation. These braces are hinged at *c* to the frame A, and can, when required, be detached from the trunnions of H, so as to allow free vibration to arm G in either direction, for the purpose of folding up the cutting apparatus, as before stated. The coupling-arm K is supported by chain Q, which connects it to the main frame. At its inner end it carries the shoe L, which is supported by a chain, P, from the end of the axle E. These chains, while they effectually support the parts to which they are attached, do not at all interfere with the folding of the bar to the outside of the wheel when braces J J are detached.

The finger-bar M is cylindrical and hollow, being made of wrought-iron pipe, and upon it are slipped the cast sockets or shanks of the guards N, the sockets tending greatly to increase the strength of the inclosed pipe. These sockets are united by a lip-and-recess connection, *d*, Fig. 2, which facilitates the placing of the guards exactly in line as the sockets are put on the bar. They are held tightly and securely upon the bar M by means of the nut *o* on its end. The lip-and-recess arrangement, it will be observed, serves here an entirely different purpose from that which it fulfils in bars that are not cylindrical, for without it it would be difficult to keep the guards exactly in line when their sockets or shanks are placed upon the round bar.

Through the hollow of the bar M may be passed a rod, *e*, to be connected with a suitable device for raising and lowering the bar, and to be operated in any convenient manner. This arrangement of the rod protects it completely on all sides from access of dirt or obstructing matter, and relieves it from friction on the ground.

By making the finger-bar of wrought-iron pipe I combine economy, lightness, and strength, the last quality being still further increased by the support given to the bar by the cast cylindrical sockets of the guards N. The superior lightness of the bar diminishes the side-draft, facilitates folding, and lessens the friction
617 on the ground. The cylindrical form also facilitates the passage of the bar over the ground, as a bar of such a form can touch a plane only in a single line, instead of exposing a large rub-

bing-surface to friction with the ground, as in a flat or oval bar. It also renders the bar much less liable to become clogged with lodged grass in mowing, any grass that may lodge upon it more readily slipping off than from the broad upper surface of a flat or oval bar.

I am aware that a finger-bar has been made by uniting the shanks of the guard-fingers and interposed sections of wood by long bolts running longitudinally through the bar, the shanks having mortises, and the sections tenons, to fit them, or *vice versa;* but this construction is complex and expensive, and has neither the characteristic feature nor advantage of my mode of construction. The shanks do not pass over and embrace the finger-bar in the sense in which that term is usually employed. They form the bar by being mortised to the interposed sections and then bolted together, and the bolts might run in an oblique direction and be tenfold in number without altering their function, which is simply to unite the fingers. One of the essential features of my invention, on the contrary, consists in the passing of the entire "finger-bar," strictly so called, through the hollow shanks of the guard-fingers. The complex bar just described, therefore, I distinctly disclaim.

I am aware also that a hollow bar of irregular form has been made, into and through which the shanks of the guard-fingers have been passed transversely, by means of holes drilled for that purpose, and secured by nuts on the rear side; but such a bar has not the strength resulting from the support given to my bar by the cylindrical sockets which embrace it; and it differs entirely from mine in the mode of attachment of the fingers.

I am not aware that a solid or hollow "finger-bar," properly so called, composed of a pipe or rod, has ever before been run through the hollow shanks of the guard-fingers which surround and strengthen the bar, such shanks being conformed in their interior configuration to the external shape of the bar on which they are placed. I disclaim distinctly the union of the shanks of the fingers by two or more long bolts. It is plain that the bar may be made of any other than the cylindrical shape and yet be hollow, and, whether hollow or solid, may receive the shanks of the fingers properly. hollowed out to fit upon it. By this mode of construction the drilling of holes and employment of bolts are entirely dispensed with. When the cylindrical bar is used the guards may readily be adjusted by turning their points up or down, their cylindrical sockets freely turning upon the finger-bar when the nut O is loosened or removed.

When in operation the parts of the machine will occupy the positions shown in Fig. 1, the braces J holding the pivoted arm G in a line coincident with the line of draft, and the chains P and Q supporting the coupling-bar and shoe, as shown; but when it is desired to fold the machine for transportation when not at work, the braces J are released from the trunnions *b*, and the arm G swings round, so as to allow the bar M to be folded against the outside of the wheel with the guards downward and the platform upward, without any necessity for disconnecting the platform or detaching the chain

619 UNITED STATES PATENT OFFICE.

DAVID ZUG, of Shaefferstown, Pennsylvania.

Improvement in Harvesters.

Specification forming part of Letters Patent No. 25697, dated October 4, 1859.

To all whom it may concern:

Be it known that I, David Zug, of Shaefferstown, in the county of Lebanon and State of Pennsylvania, have invented a new and useful improvement on combined reaping and mowing machines; and I do hereby declare that the following is a full, clear, and exact description of the construction and operation of the same, reference being had to the accompanying drawings, making a part of this specification, in which—

Figure 1 is an isometrical view of the entire machine, except the seats for the driver and raker, and the ordinary platform, and full extension of the cutting-bar and finger-beam marked 1 2. Fig. 2 shows the bearings and gearings in part. Fig. 3 is a view on the outside of the traction-wheel F and the cogged driving-wheel G and parts visible. Fig. 4 shows the leverage on the side of the truck detached; Fig. 5 the curved arms and spokes on the wheels F G and their adaptation to each other, also the ratchet-hub 5; Fig. 6, one of the clicks, more fully set forth in manner following, the alike parts having the same figure or letter in the several drawings, to which reference is made.

The traction-wheels E F are loose on the axle L, and revolve freely when the click 7 is detached from the lower and moved to the upper notch of the click-catch 6 on the adjoining spoke of the wheel, and, also, when backing the truck, the clicks do not arrest the motion of the wheel; but when down, by a forward motion, the click rests against the ratchet-teeth of the hub, and thus locks the wheel, and consequently gives a rotary motion to the axle L and the driving-wheel G, cogged on its inner periphery, which gives motion to the small cogged wheel I (or pinion I′) outside the truck and its shaft N, on which is the bevel-wheel H, geared into the beveled pinion K, which gives motion to the shaft M and its terminal wheel O, to which latter the pitman X is affixed on its outer disk and near its edge on the peg 10, operating the pitman, to which the cutter-bar 2 is affixed at 15 (on the shoe Z) crank fashion, drawing it to and fro in its groove on the shoe and between the fingers 3 3. A semicircular band, 9, with a projecting end, 16, is affixed to the truck-beams B C beneath, on the rear, to which the supporting-bar Y is hinged at 16, and also at 12 to the shoe Z, between the raised bearers 13, for the reception of bar 1, which supports the fingers or guards 3 3 and also the platform. When used for reaping this supporting-beam Y is braced with the piece W, hinged at 14 on the shoe Z. There is also an adjustable caster-wheel H (not shown on the model), under the supporting-bar Y, which rests on the ground at any desired elevation of the cutting-bar adjustment, as in common

620

Stetson & Maynard.

Mower

No 24063 Patented May 17, 1859

No. 1044.
Plano Mfg. Co.
v.
Graham et al.
} p. 620

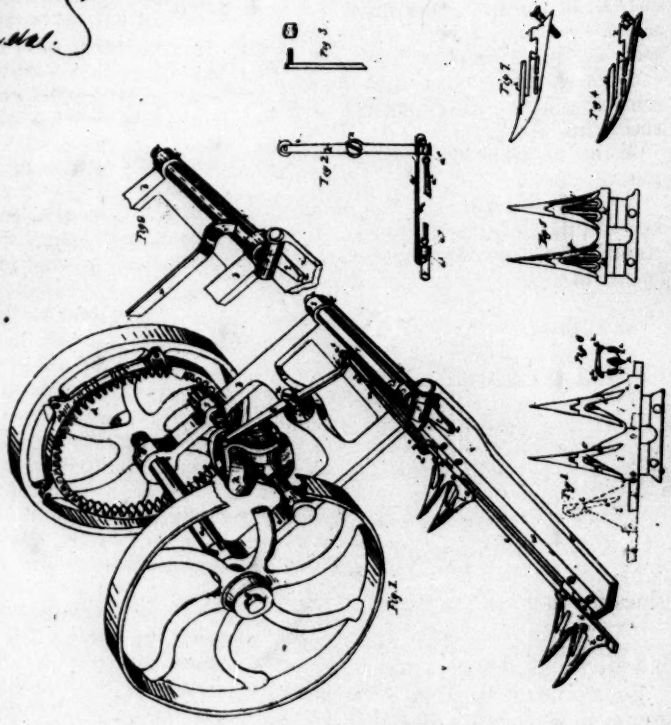

Witnesses
Robt M. Lee Jr
Danl Sandy

Inventor
W. S. Stetson
R. F. Maynard

use. The elastic spring-brace V embraces the supporting-bar Y at *v*, in which the bar can vibrate to adapt it to the folding over of the sickle-bar 2 and finger-supports 1 onto the truck when desired. The other end of the spring-brace V is hinged to a bolt passing through a box, P, with a nut and screw. This bolt is surrounded with thick gum-elastic within the box, being of sufficient power to retain the bolt, yielding only when the guards come in contact with any obstacle while operating, by which much damage to the machine may be prevented, the supporting-bar Y being also hinged at 16 so as to allow a sufficient vibration under such circumstances. A hoisting-bar, 4, is hinged to 14 on the shoe, and secured to the spring-brace V, over which the chain U is passed at one end, while the other end is secured to the projecting point on the quadrant-like grooved lever-arm Q. The lever T in its socket operates in the curved or toothed quadrant S, as shown, by which lever arrangement the shoe Z, with its appendages, can be raised and lowered with ease and retained in the desired notch.

I am aware that various devices have been employed to effect similar objects; but I am not aware of any combination substantially the same.

What I claim as my invention, and desire to secure by letters patent, is—

The combination of the brace V with the gum-elastic stuffing-box P and the supporting-bar Y, when these several parts are constructed and arranged in the manner described for the purpose specified.

DAVID ZUG.

Witnesses:
S. G. MUSSER.
J. STAUFFER.

(Here follows diagram marked p. 620.)

621 UNITED STATES PATENT OFFICE.

W. S. STETSON and R. F. MAYNARD, of Baltimore, Maryland.

Improvement in Harvesting-Machines.

Specification forming part of Letters Patent No. 24063, dated May 17, 1859.

To all whom it may concern:

Be it known that we, W. S. Stetson and R. F. Maynard, of Baltimore, in the county of Baltimore and State of Maryland, have invented certain improvements in harvesters; and I do hereby declare that the following is a full, clear, and exact description of the principles or characters which distinguish them from all other things before known, and of the usual manner of making, modifying, and using the same, reference being had to the accompanying drawings, of which—

Figure 1 is a perspective view of the machine; Fig. 2, a detached

view of the connecting-rod; Fig. 3, a detached view of that end of the lever *k* which runs in the cam-groove and the friction-roller on the end of the lever; Fig. 4, a side elevation of one of the fingers or teeth; Fig. 5, a plan view, showing two teeth or fingers in one section or division; Fig. 6, a cross-section through the middle of one of the fingers; Fig. 7, a side elevation of one of the fingers, with an obtuse angle at its base; Fig. 8, a top view of knives and fingers, showing by red and black lines the range of motion or length of stroke given to the knives, and Fig. 9 is a detached view in perspective, showing the connection of the lever for adjusting the finger-bar.

Our invention consists in certain improvements in harvesters, described and specified as follows:

Upon the axle *a* of the carriage-wheels is hung a saddle-frame, *b*, by the collars *c c*, in such manner as to vibrate about the axle. The lower end of this frame rests and runs upon the ground upon a rounded heel, *e'*.

d is the crown-gear which drives the pinion *e*, and upon the pinion-shaft *f*, which runs in the boxes *g g* in the saddle-frame, is a double spiral cam, *h*, the office of which is to give reciprocating motion to the knives *i* through the medium of the vibrating lever *k* and the connecting-rod *m*. The fulcrum *n* of lever *k* is in the center of the lever, thus giving to the knives the same length of stroke as the vibration of the cam, which obviates to a great extent the jarring and rough working so common in the cam movements used in harvesters, where large cams are used on the driving-wheels as the primary gear.

The connecting-rod *m* is of a peculiar construction and specially adapted to convey motion from the cam-lever to the cutter-bar, and is found preferable on some accounts to a single rod with ball-and-socket or universal joints at its ends. It consists of two rods, a' a^2, and four sockets, a^3 a^4 a^5 a^6, two in the end of the vibrating lever *k* and two in the end of the cutter-bar *k'*. These sockets are to receive the balls or rounded heads on the ends of the rods a' a^2. The rod a' has its ends bent inward, as shown in Fig. 2, and the rod a^2 is straight. When the balls on these rods are in their respective sockets, according to their position shown in Fig. 1, it will be seen that they act together as one rod, while there is sufficient freedom of motion in the joints to accommodate the various motions of the cutter-bar and finger-bar.

The finger-bar n' rests upon the ground, and has all the necessary motions of adjustment and accommodation to unevenness of the ground given to it by the very simple and efficient connections with the saddle-frame shown in Fig. 1. It adapts itself to slopes of the ground by means of the hinge-joint *p*, and is adjustable as to height of cut by its motion about the axis of the shaft *r*. The shaft *r* turns in the collars *s* just above the heel of frame *b*, and is prolonged so as to make the support or axis of the hinge-joint *p*. It is also prolonged beyond this joint into the brace-piece *t*, which lies in a slot or opening, *u*, in the finger-bar and acts as brace to the hinge-joint *p*. The finger-bar n' is of a particular form. (Shown in Fig. 1.)

The rear portion, v, rests flat upon the ground, and the forward part, w, rises from the part v at an angle of forty-five degrees, or thereabout. The front upper edge of w is shown as inclined in Fig. 1, so as to fit the right angle e^4 at the base of the tooth; but for facility of casting we prefer to make it perpendicular, as shown in Fig. 7, the mechanical effect of bracing the tooth being the same in both cases, and this edge and the under surface of w are embraced by the base of the fingers x, which are of the forms shown in Figs. 4 and 7. A large bearing-surface is thus gained, and when the fingers are bolted to the bar they are very firm, the direction of the bolt being shown in Fig. 4.

Instead of constructing and attaching the fingers sepa-
622 rately or in a whole set, we make them in divisions or sections of two or more, Fig. 5, by which we combine a sufficient amount of firmness with facility of attachment or removal in putting up the machine or in case of repairs, and also facility of casting the fingers. We make two openings, x' x^2, of the form shown in section in Fig. 6, through the lower part of the fingers, and the upper edges of these openings form shearing or cutting edges.

We are aware that an opening has hitherto been made through the finger; but by means of the two openings we gain two additional shearing-edges, the two middle ones on the upper edge of division x^3 being the most efficient, in conjunction with the back-and-forth motion of the knife-edges, in cutting up or reducing and clearing away gummy matter and the refuse stuff, which tends constantly to clog and impede the motion of the knives. The fingers are also lighter without losing any material portion of strength. We divide the finger-guard into two portions, e^3, and each of these portions is made concave on the under side, as shown in Fig. 6, and they are inclined so as to bring their outer edges near to the knives, while their inner edges are elevated. This form and the inclination of the divisions of the guard are attended with great advantages in respect to keeping the knives clean and removing all obstructions to their motion, and at the same time the weight is lessened without detracting from their necessary strength.

Another important feature of our harvester, in connection with the open tooth and its cutting-edges, is making the stroke of the knife-bar of such length that the knife-points e^3 shall pass the distance from the outside edge of one tooth to the outside edge of the adjacent tooth, as shown by the red lines in Fig. 8, by which means the knife-edges cut over the edges of two teeth, and also pass over the middle cutting-edges, which keeps the knives and teeth very clean of gummy matter and obstructions and makes a very efficient cut. The adjustment of the finger-bar is effected by means of the lever n^2, connected with the axis r, as shown in Fig. 9.

We claim—

1. The double hinge-joint at the end of the finger-bar, consisting of the hinge p, shaft r, collar s, and brace t, arranged and operating in the manner described, for the purpose specified.

2. The compound connecting-rod m, constructed and operated as set forth.

3. We do not claim attaching the fingers or teeth to an angle-iron bar, as that has been before done; but we do claim so constructing or forming the upper part of the obtuse angle-iron tooth-bar and the base of the finger or tooth that said base shall bear upon two plane faces of the said angle-iron, in the manner and for the purposes set forth.

W. S. STETSON.
R. F. MAYNARD.

Witnesses:
ROB SINCLAIR, JR.
DANL. SCULLY.

(Here follows diagram marked p. 623.)

624 UNITED STATES PATENT OFFICE.

LEWIS MILLER, of Canton, Ohio, assignor to C. AULTMAN & Co., of same place.

Improvement in Harvesters.

Specification forming part of Letters Patent No. 20180, dated May 4, 1858.

To all whom it may concern:

Be it known that I, Lewis Miller, of Canton, in the county of Stark and State of Ohio, have invented certain new and useful improvements in the manner of hanging and carrying the cutter-bar of mowing-machines; and I do hereby declare the following to be a full, clear, and exact description of the construction and operation of the same, reference being had to the accompanying drawings, making a part of this specification, in which—

Figure 1 represents in perspective the machine as arranged for mowing grass. Fig. 2 represents a front view with the cutter-bar in its working position. Fig. 3 represents a similar end view with the cutter-bar folded over and resting on the main frame for facility of transportation from place to place. Fig. 4 represents the manner of bracing the finger or cutter bar from the rear of the main frame, so that it may have the necessary rigidity in every other direction than the one in which it folds over onto the frame.

Similar letters of reference, where they occur in the several figures, denote like parts of the machine in all of them.

The nature of my invention consists in so hanging and bracing the cutter or finger bar of a mowing-machine to the main frame as that while it is sufficiently rigid to withstand all the resistance against it when the machine is in operation, yet it may be raised up, folded over, and rested upon the main frame for facility of transportation, as will be explained.

To enable others skilled in the art to make and use my invention, I will proceed to describe the same with reference to the drawings.

A represents the main frame of the machine, which is supported upon an axle, which in turn is supported in two wheels, B B. These

L. MILLER, Assignor to C. Aultman & Co.

Mower.

No. 20,180. Patented May 4, 1858.

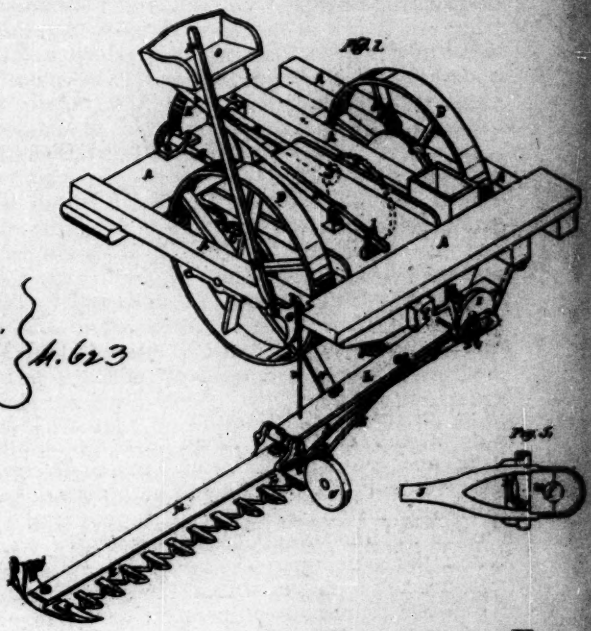

No. 1044.
Plano Mfg. Co.
v.
Gahen et al
4,623

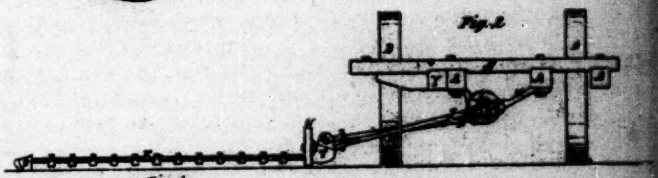

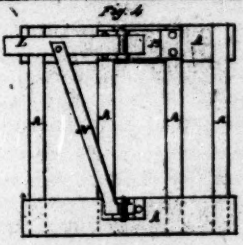

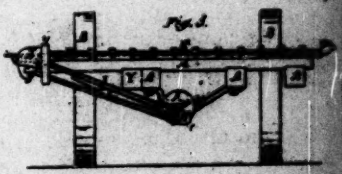

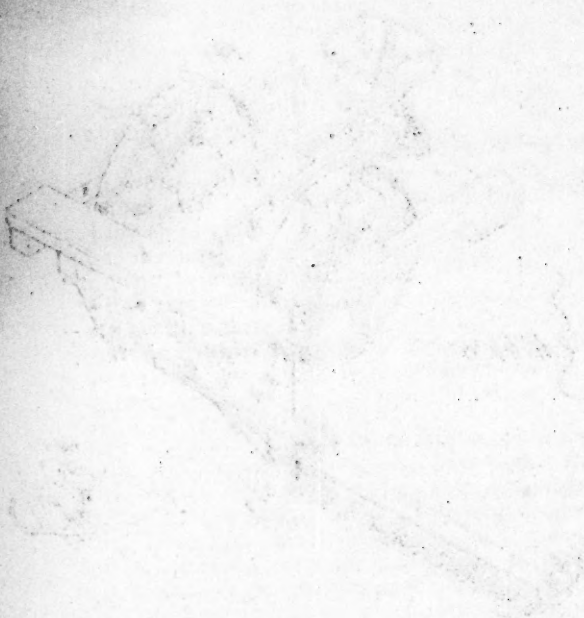

wheels B B are loose upon their axle; but by means of a peculiarly-constructed spring-pawl, *a*, on each of said wheels, and a ratchet-wheel, C, fast on the axle near each wheel, they can be made fast and loose at pleasure, so as to act as driving and supporting wheels, or the latter only, as occasion may require. The pawl *a*, of which there may be one, two, or more to each wheel, has a bow-spring, *b*, riveted to its front end, and the rear end of this bow-spring rests upon a pin, *c*, fastened to the same spoke of the wheel to which the pawl itself is pivoted. This bow-spring so arranged acts equally in holding the pawl (when thrown back) from the ratchet as it does (when dropped down) to the ratchet, and thus by a simple construction becomes equally serviceable in both capacities, insuring certainty of action or non-action, as the case may be.

On the axle there is a beveled-gear wheel, D, which takes into and operates a pinion, *d* (in dotted lines), on the shaft *e*. The shaft *e* extends rearward to the rear end of the frame and inclines upward, so that its rear end is higher than its front end, and on the rear end of said shaft *e* there is a gear-wheel, E, that takes into and turns a pinion, F, on the shaft G. The shaft G extends from the rear to the front of the machine, and underneath the main axle that carries the supporting and driving wheels B B, its front end being supported in a bolster or pillow-block, H, suspended to the under side of the front cross-piece of the main frame. By this mode of arranging the gearing the parts are kept up high enough on the frame to prevent them from catching or clogging by the grass or grain, and the driving-shaft G still passes underneath the main axle, which is important in the operation of the machine.

To the front end of the shaft G there is attached a crank or crank-wheel, I, to a wrist, *f*, in which one end of the pitman or connecting-rod J is attached, the other end of said pitman being attached to the cutter-bar or cutters K, and by which said cutters are vibrated.

A beam, L, is hinged by one of its ends to the under side of the bolster or pillow-block H, and to the other end of this beam L is hinged, as at *g*, the finger beam or bar M, said beam L being additionally braced to the main frame by a brace, N, which is permanently secured to the beam *h*, but which passes transversely rearward, and is hinged at its rear end to the main frame, as shown at *i*, Fig. 4. This allows the brace N to rise and fall with the beam L and still perform its function of a brace to said beam, and to the finger-bar attached to said beam to keep it in its proper position.

O is the driver's seat, placed on the opposite side of the
625 main axle from the cutter-bar, beam, &c., for the purpose of balancing the machine and allowing the driver to throw his weight in such direction or position as will aid the machine, in passing over obstructions, to throw it into or out of the grass or grain, as circumstances may require, and generally to manage and control the machine by his position in the seat. A lever, P, having its fulcrum at *k*, on the main frame, extends from the driver's seat to near the front of the frame, and holds upon its front end a stirrup, *l*, which hangs down perpendicularly and has a slot in it, in which

slot an arm, *m*, on the beam L rests, so that the beam may rise independent of the lever or its stirrup, but so that when required the driver may, from his seat, raise said beam for any emergency, and lower it again when necessary.

A segment, Q, having a lever, R, connected to it, is pivoted to that side of the main frame next the standing grass or grain, at a point over the beam L, said beam being suspended to said segment or arc and lever by a cord or chain, *n*, so that it may be raised or lowered or adjusted thereby. On the inner face of the arc (next the frame) there is a ratchet, the teeth of which will catch and hold against a dog fastened to the frame, so that the beam L may be held at any desirable adjusted height.

A brace, S, extends from the beam L to the inside shoe, T, to support it, this brace being rigid at its end *o* and hinged at its end *p*, said hinge being in line with the one, *g*, connecting the finger-bar M with the beam L. It will also be perceived that the pitman J is connected to the cutters or cutter-bar by a jointed connection, as at *q*, which joint, at a certain position in the line of vibration of said cutters, also comes into or near the plane of the other hinges, *g p*, so that the beam L may be raised up close to the under side of the front cross-piece of the frame, and then the cutter and finger-bar folded over, so as to lie upon the top of said front piece of the frame, as shown in Fig. 3, where it can rest while the machine is moved from place to place.

Fig. 2 represents the cutters as in position for mowing, with their several connections in their working positions, while in Fig. 3 is represented the positions of the same parts when the cutters and their beam, &c., are folded over and resting on the main frame.

T is the inside shoe, having a wheel, U, peculiarly located thereon, and V is the outside shoe or divider, having an adjustable sole or runner, *r*, thereon, and a slot, *s*, and pin *t* for a track-clearer; but as these shoes or dividers constitute the subject-matter of another application for letters patent their peculiar functions need not here be more fully referred to, their general position being shown in the drawings.

In Fig. 5 I have shown on an enlarged scale the manner of holding the key W in place against the adjustable half *u* of the box that the wrist-pin *f* on the crank-wheel I works in. It has been found very difficult heretofore to keep this key in its place, the motion or jar of the machine causing it to jump out, and thus loose, injure, or break the parts. I prevent this in the following manner, viz: I make ratchet-teeth on one face of the key, into which a spring-dog, *v*, that is fast on the double-headed key X, takes, and thus entirely prevents the key W from getting loose or jumping out. When it becomes necessary to tighten the follower *u* the key W is tapped down, the dog slipping over the inclined face of the ratchet-teeth and taking into each tooth and there firmly holding the key when adjusted. To take out the key or detach the pitman a pointed tool is put against the spring-dog *v*, pressing it into the recess in the double-headed key X, and then the key W can be raised out and the parts disconnected.

C. M. LUFKIN.

Harvester.

626

No. 18,173. Patented Sept. 8, 1857.

No. 1044.
Plano Mfg. Co.
v.
Graham et al.
p. 626

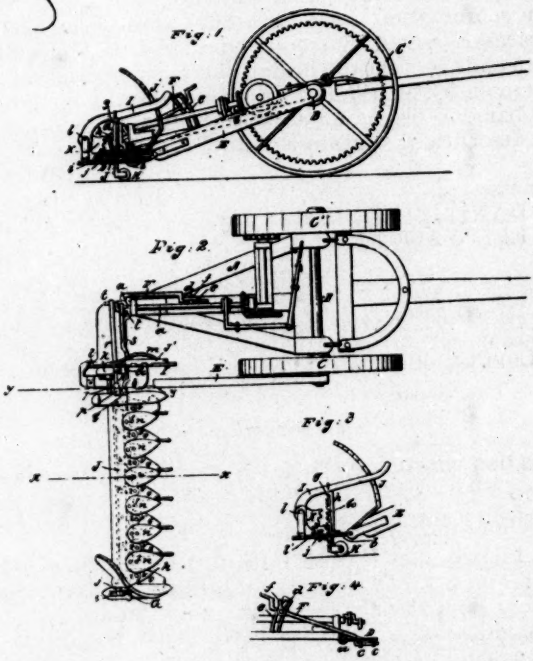

The machine here represented has upon it all the necessary fixtures for attaching a platform and reel to convert it into a reaping-machine. Some of these connections, forming the subject-matter of other applications for letters patent, need not here be alluded to in detail.

Y represents the broken end of the tongue, showing its point of connection to the main frame.

Having thus fully described the nature and object of my invention, what I claim therein as new, and desire to secure by letters patent, is—

1. So hinging the bar or beam which carries the cutters and fingers to the beam L as that it may be raised up, folded over, and carried upon the main frame, substantially as herein described.

2. In combination with the beam L, hinged as herein described, the braces N S, rigidly connected therewith, but hinged at their opposite ends, so that the beam L may rise and fall at pleasure, but be permanently braced in its proper position to give the cutter and finger bars or beams in turn their proper working position, as herein described and represented.

LEWIS MILLER.

Witnesses:
DANIEL GOTSHALL.
ELI WAGNER.

(Here follows diagram marked p. 626.)

627 UNITED STATES PATENT OFFICE.

C. M. LUFKIN, of Acworth, New Hampshire, assignor to NORRIS LUFKIN.

Improvement in Harvesters.

Specification forming part of Letters Patent No. 18173, dated September 8, 1857.

To all whom it may concern:

Be it known that I, C. M. Lufkin, of Acworth, in the county of Sullivan and State of New Hampshire, have invented certain new and useful improvements in harvesters; and I do hereby declare that the following is a full, clear, and exact description of the same, reference being had to the annexed drawings, making a part of this specification, in which—

Figure 1 is a transverse section of my improvement, taken in the line *x x*, Fig. 2. Fig. 2 is a plan or top view of same. Fig. 3 is a transverse section of the finger-bar, taken in the line *y y*, and showing the device by which the finger-bar is raised and lowered. Fig. 4 is a detached side view of the device by which the ends of the cutters of the sickle may be elevated or depressed.

Similar letters of reference indicate corresponding parts in the several figures.

This invention consists in a peculiar arrangement of the cutting device, whereby the same is effectually prevented from clogging.

G. C. DOLPH.

Mower.

629

No. 18,141.

Patented Sept. 8, 1857.

No. 1044, Plan Mfg. Co. v. Graham et al } p. 629

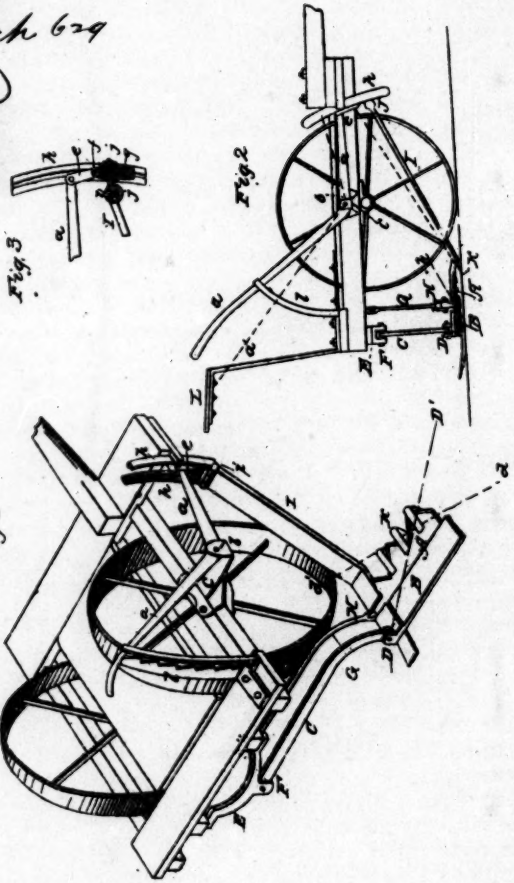

ters, *n*, is rounded, or made of semicircular form, as shown at *v*, the rounded parts *v* being concentric with the pivots 2 of the cutters *o*.

The plate J is flush with the cutters *n*. By this arrangement
628 the cut grass or grain cannot choke or clog the cutting device, as there is no place or crevice in which it can be caught, and it passes freely over the cutters and plate J.

I am aware that two series or sets of cutters working one set over the other like shears have been previously used, and I therefore do not claim cutters thus arranged; but,

Having thus described my invention, what I do claim as new, and desire to secure by letters patent, is—

The combination of the cutters *n* and *o* with the peculiarly-constructed plate J, arranged and operating in the manner and for the purpose above set forth.

C. M. LUFKIN.

Witnesses:
DAVID MONTGOMERY.
EMMA HOLMES.

(Here follows diagram marked p. 629.)

630 UNITED STATES PATENT OFFICE.

GEO. C. DOLPH, of West Andover, Ohio.

Improvement in Mowing-Machines.

Specification forming part of Letters Patent No. 18141, dated September 8, 1857.

To all whom it may concern:

Be it known that I, George C. Dolph, of West Andover, in the county of Ashtabula and State of Ohio, have invented a new and useful improvement in E. Ball's mowing-machine, for which a patent was granted June 11, 1856; and I do hereby declare that the following is a full and exact description thereof, reference being had to the accompanying drawings, in which—

Figure 1 is a general view of E. Ball's mowing-machine with my improvement attached; Fig. 2, a side elevation, and Fig. 3 a detached section of the same.

Like letters denote like parts in the several views.

My improvement relates to the manner of tipping or lowering and raising the cutters and cutter-bar. The many advantages to be derived from raising and lowering or tipping the cutters and cutter-bar of mowing-machines are so well understood that they need not be here enumerated.

The cutters A and cutter-bar B are so connected to the frame in Ball's machine that the cutters A and the bar B are adjustable only longitudinally; but in my improvement the cutters and bar are made adjustable at right angles.

In Ball's mower the rod C is connected to the bar B by a joint at D, and that rod is also connected to the brace E by a joint at F.

The rod G is connected to the cutters at H by a joint, and at the opposite end to a crank. One end of the brace-bar I is firmly attached to the cutter-bar and the other end to a wrist at J. This wrist is so arranged that it turns in a stationary box or socket. By this combination of devices the cutters and cutter-bar are allowed to move only in the manner indicated by the lines D′ *d d′*, Fig. 1, and the devices render the cutter-bar and cutters adjustable only so far as raising one end at a time. When the outer end of the cutters and cutter-bar is raised they assume a position indicated by the line from D to D′, and when the foot of the cutters and bar is raised they assume a reverse direction, indicated by the line *d d′*. The bar and cutters by this arrangement cannot be raised entirely from the ground in a parallel direction; nor can the guards K and cutters be tipped up or raised from K to a position indicated by the line *k*.

What distinguishes my improvement in the described mower is the manner of raising and lowering or tipping the cutters and bar from K to *k* or any intermediate position. The cutters and bar may be thus operated from the seat L, Fig. 2, or from the ground. The devices employed for this purpose consist, first, of the lever *a*, which works upon a fulcrum pivot or wrist, *b*, on the stand or bracket *c*, which bracket is fastened to the frame. To the short arm of the lever are attached by a pin-joint one or two links, *e*, Figs. 1 and 3. These links *e* are also connected by a pin-joint at *f* to the sliding box *g*. On each side of this box is a slot or gain, by means of which the box slides up and down upon the ways or guides *h h*, which are bolted to the frame. These ways form sections of a circle, which is the radius described in raising and lowering the slide-box between the two guides *h h* by the action of the lever *a*. The brace-bar I is connected by a joint at *i* to the wrist *j*. This wrist passes through the slide-box *g*, in which it is allowed to turn, and is retained in place by a nut or pin, as seen in Fig. 3. By depressing the lever *a* in the direction of the line *a′* the brace-bar, by its connection with the slide-box, will be raised correspondingly; also the cutters and cutter-bar, as indicated by the line *k*. By the raising and depressing of the lever the cutters and bar may be tipped more or less as the nature of the case may require, and may be retained in any desired position by slipping the lever into the teeth of the rack *l*, which is attached to the frame.

What I claim as my improvement, and desire to secure by letters patent, is—

The lever *a*, links *e*, sliding box *g*, and guides *h h*, with the adjusting-wrist *j*, when arranged as herein set forth, and in relation to an adjustable cutter-bar, as described, for the purpose specified.

GEORGE C. DOLPH.

Witnesses:
S. H. MATHER.
I. BRAINERD.

(Here follows diagram marked p. 631.)

Tinker and Sprague, 631
Mower.

No. 1044. Plano Mfg. Co. v. Graham et al. } p 631

No 17345 Patented. Aug. 11. 1857.

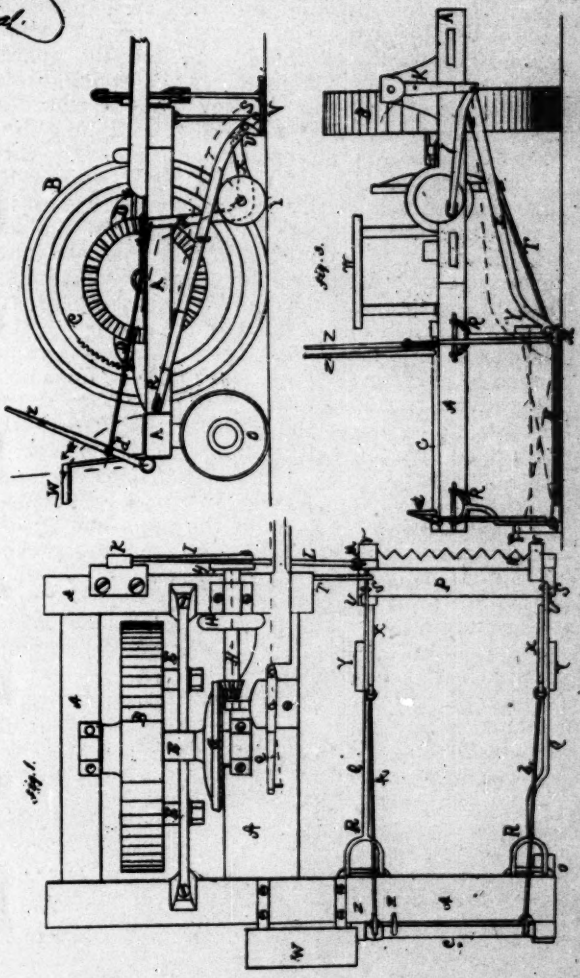

632 UNITED STATES PATENT OFFICE.

CHARLES TINKER and J. A. SPRAGUE, of Mantua, Ohio.

Improvement in Harvesters.

Specification forming part of Letters Patent No. 17945, dated August 4, 1857.

To all whom it may concern:

Be it known that we, C. Tinker and J. A. Sprague, of Mantua, in the county of Portage and State of Ohio, have invented new and useful improvements in the construction of grass and grain harvesters; and we do hereby declare that the following is a full and exact description thereof, reference being had to the accompanying drawings, in which—

Figure 1 is a top view of the machine. Fig. 2 is a side elevation, and Fig. 3 a front elevation.

Like letters refer to like parts in the several views.

A represents the frame of the machine, and B the driving or ground wheel. This has an interior rim, C, Fig. 2, furnished with cogs upon its inner surface. These cogs drive two pinions D D, which are supported on journals E E, that pass through the bar F, which is bent downward so as to let the shaft of the main wheel pass above it, as seen at F′, Fig. 1. The shaft of the main wheel forms the journal or bearing of the bevel-wheel G, which has a hollow shaft through which the main shaft passes. A small leading-wheel, that cannot be seen in any of the views, gears into both the wheels D D. Standing, as it does, between them, and being concentric with the main wheel, it receives its power equally from both the wheels D D, this power and motion being communicated to the bevel-wheel G, which is situated upon the same shaft, and which is also concentric with the main wheel. This bevel-wheel G drives the crank-shaft H, upon which is the balance-wheel H′ and the crank-wheel H″, Fig. 3. The connecting-rod I extends from the crank to the vibrating suspension-rod K. By this means another connecting-rod, L, is put in motion, and this, by its connection with the cutter-bar M N, gives motion to that part, as seen in Figs. 1 and 3. The end of the frame that carries the cutter-bar and its appendages is supported by a ground-wheel, O, Figs. 1 and 2. The cutter-bar M N and the finger-bar P are supported upon or by long arms Q Q. These arms divide before reaching the frame-timber A, as seen at R R, and are secured to that piece by a long staple or its equivalent, that passes through holes in the branching ends, and then, turning at right angles, enters the frame A.

The holes through which the staple passes are oblong on the outer end of each arm, as seen at R′, Fig. 2, to allow of a little vibration, necessary to the free action of the several parts, as hereinafter described. The finger-bar P is attached at each end to one of the arms Q by a link or universal joint, as seen at S S, Figs. 1 and 2, thus allowing the cutter and finger bar to rise and fall with the inequalities of the ground; or one end can rise while the other falls, or *vice*

versa, and thus the cutter-bar can adapt itself to elevations and depressions in every direction.

For the purpose of guarding against a sidewise strain we attach a long rod, T, by a link or joint, to the inner end of the finger-bar P, as seen at T'. The opposite end of this rod is attached to the under side of the forward part of the frame A by a link-joint at a point exactly coinciding in its position with the union of the two connecting-rods I and L—that is, the rod T has just the same length as the connecting-rod L, which drives the cutter-bar. By this arrangement the cutter-bar and its appendages are free to move in any direction except sidewise.

In order to prevent the cutter and finger bar from tipping forward and thus digging into the ground, we apply stops U U to the under side of the forward part of the arms Q Q, which strike upon the heel of the shoe V. This allows the cutter-bar to vibrate upward from a horizontal position, but will not allow the forward edge to drop below the horizontal plane.

For the purpose of placing the cutter-bar entirely under the control of the driver, as he sits upon his seat W, so that he may raise it from the ground in order to avoid coming in contact with a stone or other obstruction, either in the middle or at either end of the cutter-bar, we attach bent levers X X, by the shorter arm, to the forward end of the arms Q Q. The fulcrum of this bent lever consists of the wheel Y, the journal of which passes through the angle of the lever and the face of the wheel resting upon the ground, thus forming the fulcrum. The long arms of the levers X extend upward, each being united to or coupled with the hand-levers Z and Z' (shown in Fig. 3 by the side of the seat W, and at Z and Z' in Figs. 1 and 3) by means of connecting-rods *a* and *b*, Fig. 1.

The rod *a* connects with the lever Z, and by drawing back the upper end of this lever in the direction of the arrow to a vertical position (see red line in Fig. 2) the inner or left-hand end of the cutter-bar can be elevated to avoid any obstacle that may be seen ahead by the driver. The lever Z' being attached to a rock-shaft, *c*, that extends along the frame-work A from the seat W toward the right, and having an arm *d* extending upward about a foot—a distance corresponding to the point of attachment of the rod *a* to the lever Z, as seen at *d'*, Fig. 2—the lever Z' being drawn backward, in the same manner as has been described in reference to the lever Z, the outer end of the cutter-bar can in like manner be raised from the ground at the pleasure of the driver, in order to avoid any obstruction, or the whole cutter-bar and its appendages can be raised so as to entirely clear the ground. In this movement of one, or either, or both of the levers Z and Z' the weight of the cutter-bar and its appendages is transferred, in whole or in part, as one or both the levers are drawn back from the shoes V V to the wheels Y Y, which form the fulcrums of the bent levers X X.

633

In moving the machine from place to place, or from one field to another, both the levers Z and Z' are drawn backward as described, and secured. At the same time the bevel-wheel upon the crank-shaft H is thrown out of gear by the sliding lever *e*, and the whole

638

5 Sheets—Sheet 5.

E. BALL.

Combined Reaper and Mower.

No. 25,797. Patented Oct. 18, 1859.

No. 1044.
Plano Mfg. Co. } p. 638
v.
Graham et al.

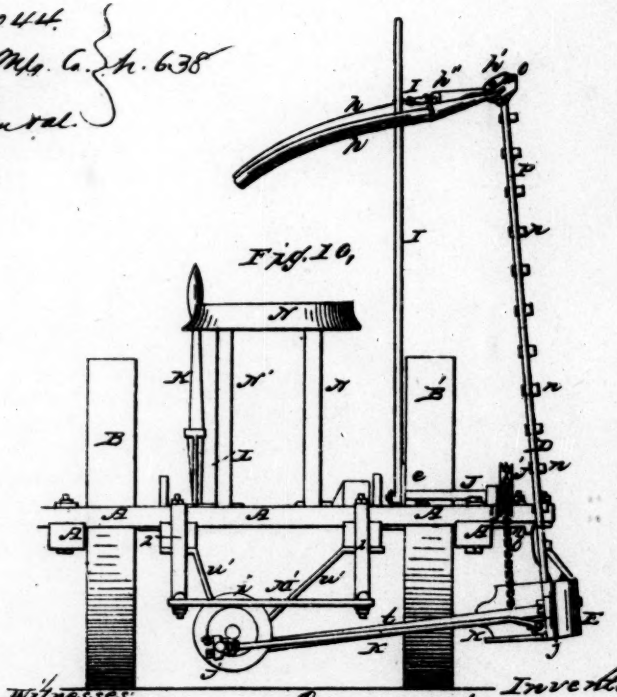

Witnesses:
John E. Adams
A. C. Wadsworth

Inventor.
E. Ball. By his Attorney.
Thos. H. Dodge

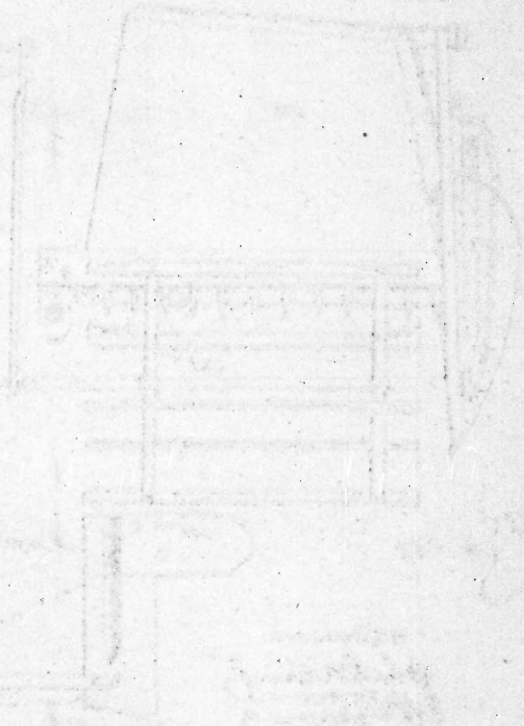

637

5 Sheets—Sheet 4.

E. BALL.

Combined Reaper and Mower.

No. 25,797. Patented Oct. 18, 1859.

Fig. 11,

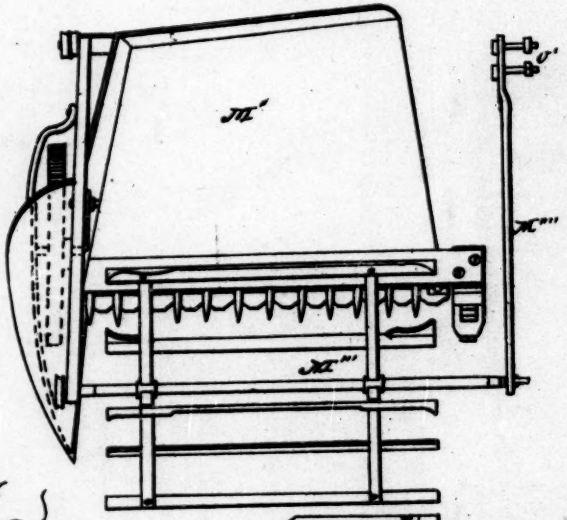

No. 1044
Plano Mfg Co
v.
Graham et al
} p. 637

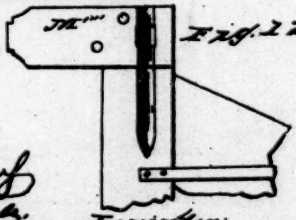

Fig. 12,

Witnesses:
John D. Adams
A. C. Wilkinson

Inventor:
E. Ball
By his Attorney.
Thos. H. Dodge

636

5 Sheets—Sheet 3.

E. BALL.

Combined Reaper and Mower.

No. 25,797. Patented Oct. 18,-1859.

Fig. 9.

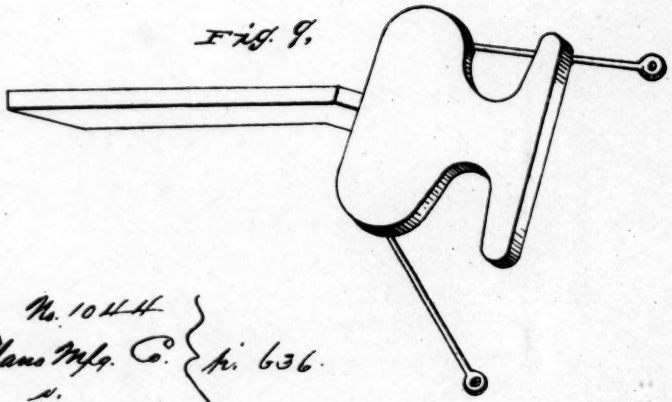

No. 1044
Plano Mfg. Co.
v.
Graham et al.
} p. 636.

Witnesses:
John R. Adams
A. C. Wadsworth

Inventor:
E. Ball
By his Attorney,
Thos. H. Dodge

635

5 Sheets—Sheet 2.

E. BALL.

Combined Reaper and Mower.

No. 25,797. Patented Oct. 18, 1859.

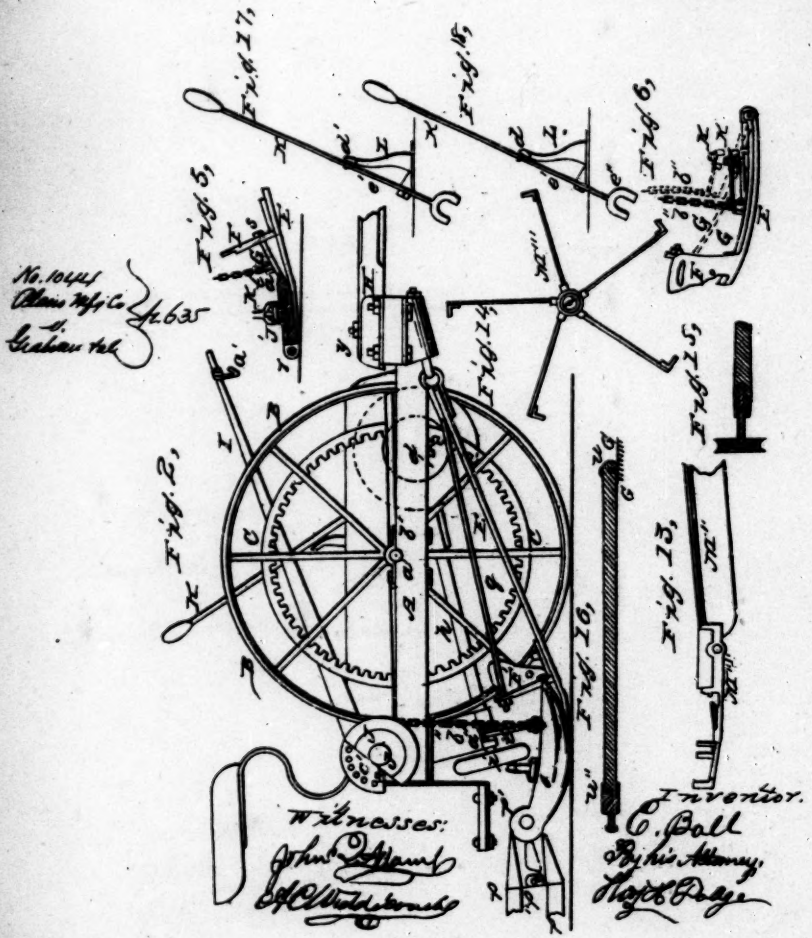

634

5 Sheets—Sheet 1.

E. BALL.

Combined Reaper and Mower.

No. 25,797. Patented Oct. 18, 1859.

No 1044.
Plano Mfg Co
Graham vel.
p. 634

Fig. 1,

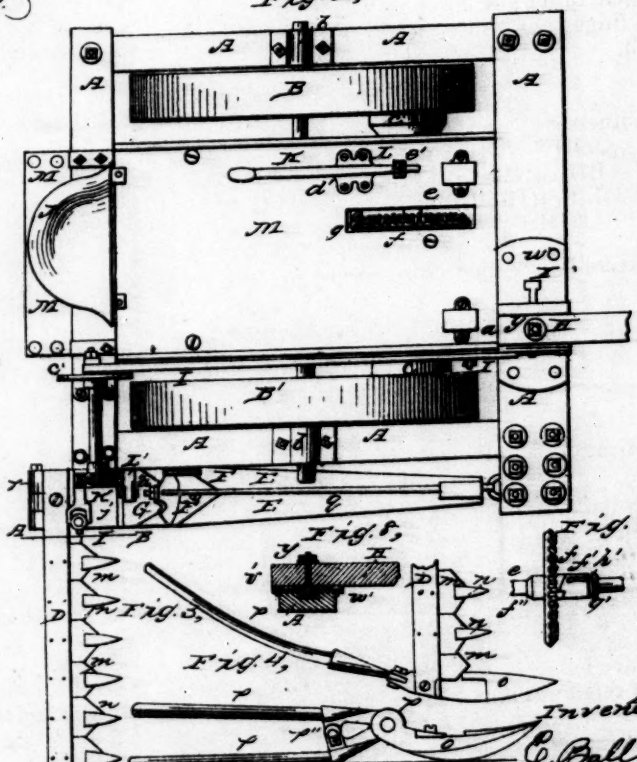

Witnesses: John E. Adams
A. A. Wildsconsly

Inventor.
E. Ball
By his Attorney,
Thos. H. Dodge

machine is drawn over the ground upon the four wheels B O Y Y, as described. The bevel-wheel upon the shaft H being now slipped into gear and the levers Z and Z′ released, the machine is ready for operation.

In backing the machine out of the grass or grain, in turning a corner, or in passing over mown grass, the advantages of this arrangement become most apparent.

What we claim as our improvement, and desire to secure by letters patent, is—

The vibrating arm K, parallel rod I, and connecting-rod T, in combination with the bent levers X X, fulcrum-wheels Y Y, levers Z Z′, and stops U U, when the same are arranged to operate in relation to each other and used in connection with a self-adjusting cutter and finger bar substantially in the manner and for the purpose set forth.

CHARLES TINKER.
J. A. SPRAGUE.

Witnesses:
JOHN T. ESTY.
BILLINGS P. FINCH.
J. E. RIDDLE.
ANDREW J. SQUIRE.

(Here follow diagrams marked pp. 634, 635, 636, 637, & 638.)

639 UNITED STATES PATENT OFFICE.

E. BALL, of Canton, Ohio.

Improvement in Harvesters.

Specification forming part of Letters Patent No. 25797, dated October 18, 1859.

To all whom it may concern:

Be it known that I, E. Ball, of Canton, in the county of Stark and State of Ohio, have invented certain new and useful improvements in combined reapers and mowers; and I do hereby declare that the following is a sufficiently full and exact description thereof to enable those skilled in the art to make and use my said improvements, reference being had to the accompanying drawings, and to the letters of reference marked thereon, forming a part of this specification.

Figure 1, Plate I, is a top or plan view of the machine when arranged for mowing. Fig. 2, Plate I, is a side view of the same. Fig. 3 is a plan view of the outer end of the finger-beam and track-clearer. Fig. 4 is a side view of the same. Fig. 5 is a section on line A B, Fig. 1. Fig. 6 is a section showing the heel of the finger-beam and the parts attached thereto, looking in the direction of arrow 1, Fig. 1. Fig. 7 is a view of the device for throwing the gearing in and out of action. Fig. 8 is a section on line *a b*, Fig. 1; and Fig. 9 is a plan view of the seat for the raker. In Plate II of the accompanying drawings, Fig. 10 is a rear view of the machine when ar-

ranged for mowing, with the finger-beam turned up against the frame for passing from one field to another. Fig. 11 is a plan view of the reaping attachment. Figs. 12, 13, 14, and 15 are detached sections. Fig. 16 is a vertical section through the center of the coupling-arm *t*, and Figs. 17 and 18 are views of the shipping-lever and stand.

The same letters of reference refer to the same parts in all of the figures.

The main frame A is of rectangular form, and is supported upon axles *a a'* of the independent wheels B B', which turn in suitable bearings, the outer bearings, *b b'*, only being shown in the drawings.

To the inside of the wheels B B' are attached in any suitable manner gear-wheels C (see Fig. 2), having teeth or cogs on their inner surfaces to work into the teeth on small wheels *d*, which run loose on the shaft *e*, but which have ratchet-disks attached in such a manner as that when the machine is drawn forward by means of the draft-pole H pawls attached to the inside of the cases *c c'* take into their respective ratchet-teeth, and thus turn the shaft *e*, the cases *c c'* being rigidly attached to the shaft *e*. As this arrangement is similar to that described in the patent granted to John Butter and myself, December 1, 1857, no more minute description is here necessary further than it may be observed that the machine when being backed does not operate the shaft *e*.

On the center of the shaft *e* is a hub, *f''*, against which bears the hub of the gear-wheel *f*, which turns loosely on the shaft *e*, and which also gears into the wheel *g* on the crank-shaft *h*, which is supported by suitable bearings in an inclined position under the frame.

To the lower end of the crank-shaft *h* is fastened a balance-wheel, *i*, and to which the pitman-rod *k* is attached by a swiveled connection, *j*, while the other end is attached to the cutter-bar *l* at *j'*, so that as the shaft *h* revolves a reciprocating motion is imparted to the cutters *m*, which work through guard-fingers *n*, attached to the finger-bar D. The finger-bar D is fastened to a swinging plate, G, hinged to the lower end of the brace bar or plate E at *r*. There is also attached to the plate E a guide-piece, F, to keep the plate G steady as it turns on its hinge *r*, the upper end of the plate G working between shoulders on the piece F. When it is desired to fix the plate G in a rigid relative position as respects the brace-plate E the screw *s*, which works through the piece F into the plate G, is turned up, so as to hold the plate firm. To obviate the necessity, however, of taking out the screw-nut *s* every time the change is made, the piece F is provided with a slot, so that the screw-nut *s* need only be loosened sufficiently to play freely up and down in the piece F when it is desired to permit the plate G to turn on its hinge. The brace-plate E is attached to the front of the frame by a hinge-joint, as fully shown in Figs. 1 and 2.

To keep the finger-bar and cutting apparatus from being wrenched laterally, a coupling-arm, *t*, is hinged to the plate G at *u*, and to the hanger *u'* by a swivel-joint, *u''*.

To give greater strength to the brace-plate E and guide-piece F, they are connected by the truss-rod *q*, as seen in Figs. 1 and 2.

The outer end of the finger-beam D is provided with a shoe, *o*, and the shoe *o* has hinged to its rear a track-clearer, consisting of two curved arms, *p p*, hinged to a common center, *p'*, and provided with a nut and bolt, *p''*, so that their outer ends can be adjusted and held in different relative positions. (See Figs. 2, 3, 4, and 10.)

To the top of the rear part of the main frame A is secured in suitable bearings a shaft, J, which has connected to its outer end a grooved pulley or wheel, J', while to its inner end is connected a lever I. A chain or rope, *b''*, is connected to the wheel J', and also to the coupling-arm *t*, as fully shown in Fig. 10. A catch-plate, *c'*, is fastened to the upper rear part of the frame, as shown in the drawings, in such relative positions as respects the fulcrum of the lever I that a pin or other suitable device attached to the lower part of said lever will catch into the holes in the plate *c'* and hold the lever in any desired position, the lever being so constructed that it can be moved laterally, so as to release the pin or catch from the plate *c'* when it is desired to change the position of the lever.

The draft-pole H is held between shoulders cast or formed on the draft-piece *v* by means of a bolt, *y*. The head of the bolt *y*, being allowed to drop into the opening *x* of the plate *w*, is then moved, together with the draft-piece *v* and pole H, laterally, so as to cause the body of the bolt *y* to move in the slot *x* in the plate *w*, when the nut on the bolt *y* is tightened, so as to hold the pole H firmly to the plate *w*, which is rigidly attached to the front of the frame A. (See Figs. 1, 2, and 8.) When it is desired to change the relative position of the pole H to adjust the draft all that is necessary to do is to loosen the nut on the bolt *y* and move or slide the bolt, pole H, and piece *v* to the desired position, and then tighten the nut again. The plate *w* has shoulders *w'*, which fit on each side of the front piece of the frame A, while the draft-piece *v* has shoulders *v'*, which in turn fit over the sides of the plate *w*, thus rendering the draft-adjusting device both strong and simple.

The shipping-lever K is pivoted at *e'* to its standard L, which in turn is bolted to the covering or floor M, so that the forked end *e''* of the lever extends down through the floor M and works in the groove *g'* in the slotted shipper-piece *f'*, which is free to slide back and forth on the shaft *e*, but is caused to turn with the shaft *e* by means of the pin *h'*, which passes through the shaft and extends on each side thereof into the slot in the shipper-piece *f'*.

By reference to Fig. 7 it will be seen that by working the lever so as to move or slide the shipping-piece *f'* back and forth the cutters can be thrown into or out of action, at the pleasure of the driver, when the machine is being moved forward. The lever K is provided with a hole, into which fits a pin, *d'*, in the upper end of the standard L when the cutters are to be operated; but when they are to be stopped the driver takes hold of the lever and lifts it up and moves it to one side of the pin, as shown in Fig. 18.

N is the driver's seat, supported by springs N', and M' is the raker's foot-board, attached to the rear of the frame.

M'', Fig. 11, is the grain-platform, M''' the reel, M'''' the connect-

ing-plate, and M'''''' the inner reel-support, to be attached to the part F' on the brace-plate E by bolts *o'*.

Figs. 12, 13, 14, and 15 represent detached sections of the reaping attachment. As it is, however, my intention to apply for a separate patent on my improvements in the reaping attachments, they will not be more particularly described in this connection.

When mowing, the finger-beam being attached to the hinged plate G, the front of the fingers can rise and fall to a limited extent, while the rear end of the brace-plate E rests on the ground, so that the fronts of the cutters are not so liable to run into slight and sudden elevations of the ground as they would without this provision. The driver, too, by means of the lever I, can with but little effort turn up the front of the fingers at pleasure without raising either end of the finger-beam off of the ground, as shown in red, Fig. 6. When, however, it is desired to raise the finger-beam and sickle entirely off of the ground (and the front of the plate G is allowed to play up and down in the slot in the piece F), the driver has to turn the lever I, so as to draw the front of the plate G up against a stop on the top of the guide-piece F, or until the screw *s* strikes against the top of its slot, when the finger-beam can be raised entirely off of the ground, and in nearly a horizontal position, the top of the inner side of the hinged plate G coming in contact with the coupling-arm *t*, as shown in Fig. 16 at G'.

In moving the machine from field to field the finger-bar D, together with the cutting apparatus, being turned up, as shown in Fig. 10, they are held in that position by means of a hook or catch, I', on the lever I, being inserted into a slot in the track-clearer and held firmly in place by the bolt *p''*, which can be moved back and forth, in connection with the arms *p p*, which can be moved so as to grasp firmly anything placed in the slot in which the bolt *p''* works. When the finger-beam is raised into a vertical position the cutter-bar is liable to slide down onto the ground, and to prevent which I provide the coupling-arm *t* with a spur, *k'*, so that the pitman-rod *k* will rest upon that, and thus hold the cutter-bar in place, as shown in Fig. 10.

Having described my combined reaping and mowing machine, what I claim in this patent is—

1. The hinged plate G, constructed as shown and specified, in combination with the finger-bar D and brace-plate E, substantially as described.

2. The combination of the coupling-arm *t* (swiveled only at the point of connection with the main frame), in combination with hinged plate G, hinged brace-plate E, and guide-piece F, substantially as set forth.

641 3. The guide-piece F, in combination with the brace-rod *q*, hinged plate G, brace-plate E, coupling-arm *t*, and chain *b''*, substantially as described.

4. The combination and relative arrangement of spur *k'* with coupling-arm *t* and pitman *k*, as and for the purposes set forth.

5. The combination of the hinged plate G and adjusting-screw *s*

E. Ball,
Mower.

No 15507 Patented. Aug. 12. 1856.

No 1044.
Plano Mfg Co
v.
Graham et al. } p. 642

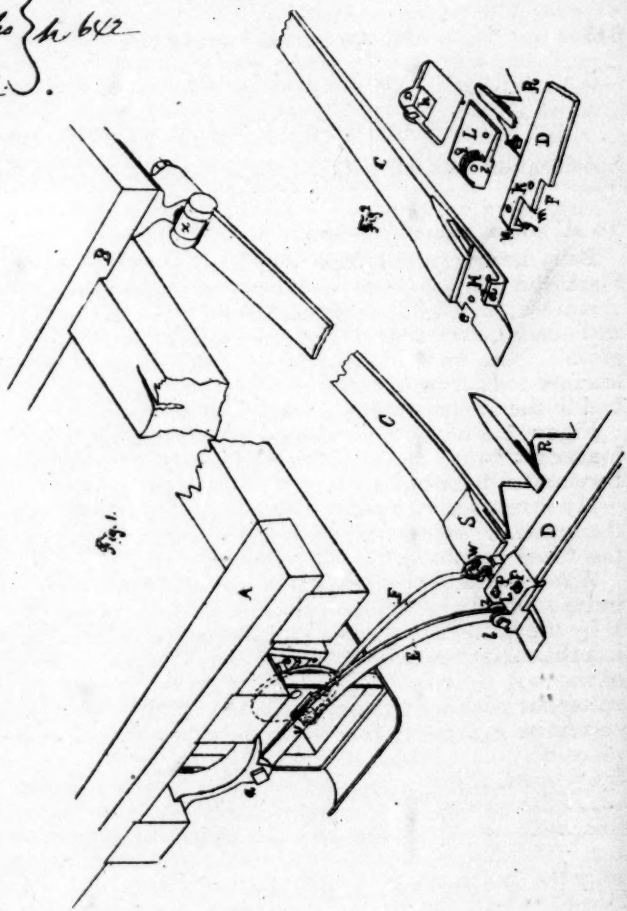

with the slotted guide-piece F, hinged brace-plate E, and chain *b''*, arranged as and for the purposes set forth.

E. BALL.

Witnesses:
DANIEL GOTSHALL.
JACOB KEPLINGER.

(Here follows diagram marked p. 642.)

643 UNITED STATES PATENT OFFICE.

EPHRAIM BALL, of Canton, Ohio.

Improvement in Mowing-Machines.

Specification forming part of Letters Patent No. 15507, dated August 12, 1856.

To all whom it may concern:

Be it known that I, Ephraim Ball, of Canton, in the county of Stark and State of Ohio, have invented improvements in mowing machines; and I do hereby declare that the following is a full, clear, and exact description of the principle or character which distinguishes them from all other things before known, and of the usual manner of making, modifying, and using the same, reference being had to the accompanying drawings, of which—

Figure 1 is a linear perspective view of the joints and braces hereinafter set forth; and Fig. 2, a representation of the lock-fastening, hereinafter described and claimed in detached parts.

My invention consists in a mode of connecting the cutter-bar with the braces, so as to secure great steadiness and strength, which I call the "lock-fastening."

A represents the cross-beam in rear of the machine; B, the cross-beam in front of it. The cutter-bar D is connected with the frame B by the braces E C. Both these braces are hinged in order to permit the cutter-bar to be raised. Brace E is connected with the rear of frame A B, and jointed at both ends, *a b*. Brace C connects the cutter-bar with the front beam, B, of the frame to give strength and steadiness against resistances arising from the forward motion of machine. This brace C is hinged on one end, as seen at X, to the front beam, and strongly jointed and bolted at the other end to the cutter-bar in the following manner: Brace C (see Fig. 2) is wrought-iron, with a flange, H, on its outer extremity to receive the cutter-bar. This flange H is so constructed as to prevent any play of joints after the two pieces are bolted together. A part of the flange is removed to form the notch *e*, which is to receive the turn-down or upset portion *g* of the cutter-bar D. The turn-up or upset portion of flange H will fit into the recess *f* of cutter-bar. Thus the two pieces are set together, and the top plate, L, placed over it. This plate L has a projection, *h*, at its bottom, which will fit exactly into recess *n m* of cutter-bar D, and so the lock is complete, and the cutter-bar flange H and plate L are fast by the nuts and bolts *p p*. Plate L has

two flanges, Z, to receive the brace E, which is jointed to the flanges by bolt *b* and to the frame by bolt *a*, and thus permits the cutter-bar to be raised when necessary. The brace C has a cast-iron flange, S, which is so arranged as to permit the knives to slide between it and the brace. Between this flange S and lock or plate L slides the connecting-rod F, which moves the knives. This connecting-rod F is jointed at both ends with universal joints *v* and *w* to permit any sidewise or up and downward motion, so as to provide for the various motions of the machine, and to prevent friction from straining of the parts.

I am aware that attempts have been made to joint the cutter to the machine so as to give it play up and down; but by placing the hinge-joint at the joints set forth the improvement and advantages are obvious, as either end of the cutter-bar may be raised and lowered without moving the other end at the same time, and both ends may be raised and lowered at the same time, according to the necessities of the case, so that it may operate upon ridges or embankments, and upon very uneven soil, and also ride over obstructions without injury.

The object of the lock-fastening is to prevent the cutter-bar from working loose in consequence of the immense strain upon this part. Screw-bolts could not keep the parts from wear and shaking in a short time, and with my lock-fastening the office of the screw-bolts is merely to hold the parts of the lock together.

I claim—

The lock-fastening for such cutter-bar, made by the removed and upset portions of the brace and the extremity of the cutter-bar, as set forth.

EPHRAIM BALL.

Witnesses:
T. CAMPBELL.
C. AULTMAN.

(Here follows diagram marked p. 644.)

645 UNITED STATES PATENT OFFICE.

E. BALL, of Canton, Ohio, assignor to himself and JOHN BUTLER, of Buffalo, New York.

Improvement in Mowing-Machines.

Specification forming part of Letters Patent No. 18788, dated December 1, 1857.

To all whom it may concern:

Be it known that I, E. Ball, of Canton, in the county of Stark and State of Ohio, have invented a certain new and useful improvement in grass-harvesters, better known as "Ball's improved Ohio mower;" and I do hereby declare that the following is a full, clear, and sufficient description thereof, reference being had to the annexed drawings, making part of the same, of which—

Figure 1 is a side view of my improved machine. Fig. 2 is a rear

E. BALL.

Harvester.

No. 18,788.

644

Patented Dec. 1, 1857.

No. 1044.
Plans Mfg. Co.
v.
Graham et al
} p. 644

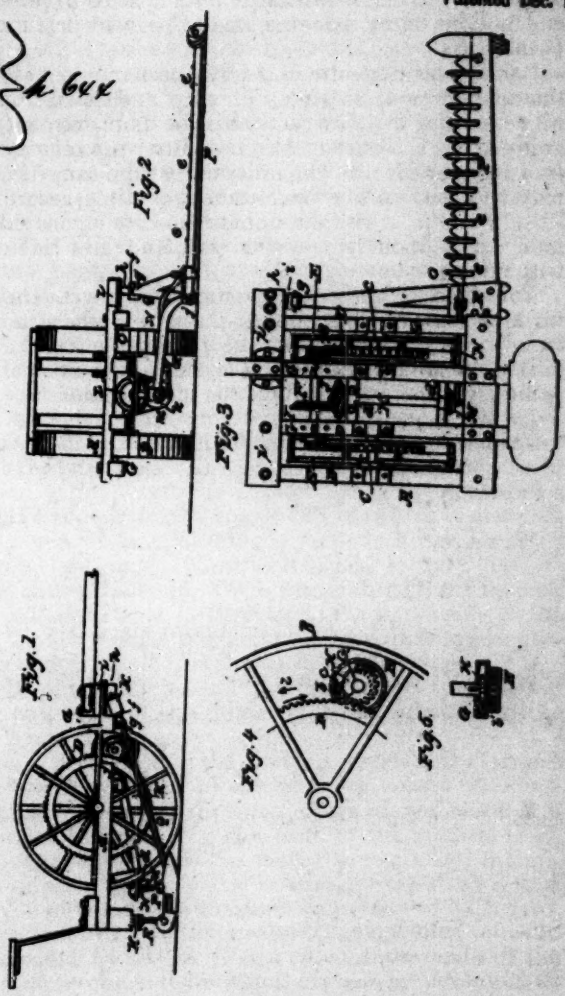

view of the same. Fig. 3 is a plan or top view of the same. Fig. 4 is a detached view of one of the pinions and a portion of one of the spur-wheels, the pawl and ratchet of the pinion being shown. Fig. 5 is a detached plan or top view of one of the pinions.

My invention consists in a peculiar manner of attaching the finger-bar to the frame of the machine.

The frame of the machine, A, is of rectangular form, and is supported by two driving-wheels, B B, each of which has a separate axle, C, and also a spur-wheel, D, secured to the inner sides of the spokes and gearing into a pinion, E. Both of these pinions are placed loosely on the ends of a horizontal shaft, F, which runs in suitable bearings, *a a*, on the frame A. To this shaft F there are permanently secured two caps, G, within each of which a pawl, *b*, is secured, and these pawls catch into the teeth of ratchets H H, which are attached to the inner sides of the pinions E E. (See Figs. 4 and 5.) The pawls have small springs *c* directly over them, one over each, which keep them in the teeth of the ratchet.

I is a bevel-toothed wheel, securely attached to the shaft F. The wheel I gears into a bevel-pinion, J, at the upper end of an inclined shaft, K, which runs in suitable bearings, *d d*, attached to the frame A. Directly back of the pinion J, on the shaft K, there is a fly or balance wheel, L, which serves to prevent little irregularities in the action of the machine, or of its wheels, from affecting the action of the sickle. At the lower end of the shaft there is a crank-pulley, M, to which one end of a connecting-rod, N, is attached, the opposite end being pivoted to a sickle, O, working between fingers *e e* upon the finger-bar P.

To the inner end of the finger-bar P there is rigidly secured at a right angle an inclined bar, Q, the upper end of which is attached to a small rod, *f*, by a pivot, *g*, forming a joint or hinge, the rod *f* being itself secured within a cylindrical socket, *h*, by a nut, *h'*, screwed upon the end of said rod, which has a thread cut thereon for this purpose. The socket *h* is fastened to the under side of the front cross-piece, *i*, of the frame, the bar Q therefore running lengthwise of the frame and at its side, as shown in the drawings.

To the inner end of the finger-bar P the brace-rod R is connected by a pivot, *j*, the outer end of said brace-rod being attached to the back part of the frame A by a pivot, *k*.

As the machine is drawn along the driving-wheels B B of course move in the direction indicated by arrow 1, Fig. 4, and the spur-wheels D D, moving in the same direction, cause the pinions E E to move in the direction of arrow 1'. The teeth of the ratchets H H, catching against the pawls *b*, cause the shaft F to rotate, and motion is thereby communicated to the sickle O through the shaft K and connecting-rod N. In case of the machine being moved backward, the sickle O is not operated, as the spurs and pinions then move in the directions indicated by arrows 2 and 2', and the teeth of the ratchets H H slip underneath their respective pawls. The cutter-bar P is permitted to rise and fall bodily, or either end may rise and fall according to the irregularities of the ground, in consequence of its connection to the frame A by the bar Q, for the upper end of

said bar is connected to the frame by a universal joint, the pivot *g* allowing the finger-bar and bar Q to rise and fall bodily, and the ability of the rod *f* to turn in the socket *h* permitting either end to rise and fall, the brace-rod R serving to steady the finger-bar while it is moved and to prevent it from being wrenched out of place by the resistance of the grass or of obstacles; and thus the finger-bar is, under all circumstances, at liberty to conform to the unevenness of the ground, and consequently the sickle will perform its work better and with greater uniformity than it otherwise could do.

I am aware that I am not the first to hang the finger-bar from the main frame, so that it can yield to the inequalities of the
646 ground. This has been done by prolonging the finger-bar, or by attaching to it another bar prolonged beyond and in the rear of the main frame and driving-wheels, as in the case of the harvester of Jonathan Haines, patented September 4, 1855 (the which in all its parts I entirely disclaim), the finger-bar, as thus extended, being hung from the front cross-piece of the frame by rods, the ends of which are hooked in staples respectively to the extended finger-bar and to the front cross-piece. The chief objection to this arrangement is that as the machine passes over the grass already cut, which is left spread upon the ground at the previous passage of the sickle, the extension of the finger-bar pushes it up before it, and finally takes it up and carries it along until it falls off in large quantities, thus heaping the grass and preventing it from drying so thoroughly. At the same time this gathering of grass by choking the crank in front of it either renders the working of the sickle very difficult or stops it altogether. This difficulty, it is obvious, cannot occur where (as in my improvement) the finger-bar ends on the inner side of the machine, and is so attached by the brace-rod R and the rigidly-attached bar Q that perfect freedom of motion in rising and falling is combined with a firm connection, and at the same time leaves the ground entirely free in the rear of the driving-wheels and within the line described by the forward motion of the inner end of the sickle, as shown. The broad and rigid attachment of the inclined bar Q to the finger-bar P so firmly supports and holds the latter in place that the objections which might possibly otherwise be brought against the use of the short curved arm R are entirely obviated.

Having thus fully described my improved mower, what I claim as of my own invention, and desire to secure by letters patent, is—

The combination of the short curved brace-rod R with the rigid and broad angle attachment of the inclined bar Q to the finger-bar P, the whole arranged for joint operation, substantially as and for the purpose above set forth.

In testimony whereof I have hereunto set my hand before two subscribing witnesses.

E. BALL.

Witnesses:
DAVID SLANKS.
PERCY S. SOWERS.

(Here follow diagram marked p. 647.)

AULTMAN & MILLER.

Mowing Machine.

No. 15,160.

Patented June 17, 1856.

Fig. 2

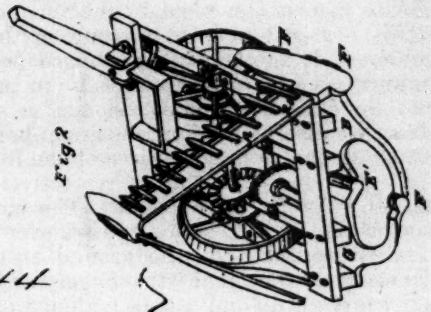

No. 10744
Plano Mfg Co.
v.
Graham et al

Fig. 1

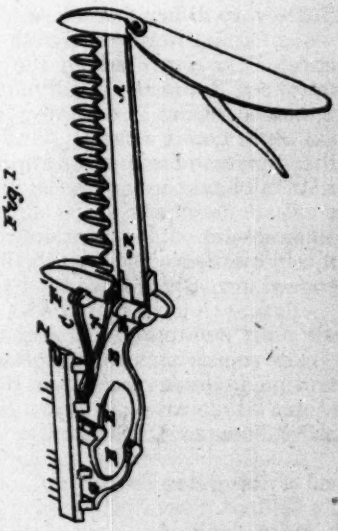

648 UNITED STATES PATENT OFFICE.

CORNELIUS AULTMAN and LEWIS MILLER, of Canton, Ohio, assignors to BALL, AULTMAN & Co., of same place.

Improvement in Mowing-Machines.

Specification forming part of Letters Patent No. 15160, dated June 17, 1856.

To all whom it may concern:

Be it known that we, Cornelius Aultman and Lewis Miller, both of Canton, in the county of Stark and State of Ohio, have invented an improvement in mowing-machines; and we do hereby declare that the following is a full, clear, and exact description of the principle or character which distinguishes it from all other things before known, and of the usual manner of making, modifying, and using the same, reference being had to the accompanying drawings, of which—

Figure 1 is a perspective view, showing the attachment of the cutter-bar to the machine; and Fig. 2, a perspective of the machine, showing the cutter-bar turned up and over the machine.

Our improvement consists in a peculiar mode of hinging the cutter-bar to the machine, as hereinafter described.

A represents the cutter-bar. This cutter-bar is attached to the frame in such a manner that it can be raised and lowered so as to adjust itself to the unevenness of the ground, and can also be raised up entirely and fastened to the machine after the work on the field is finished, as it is represented in Fig. 2 on the drawings.

The connection of the cutter-bar is effected by hinges F F′, braces B and C, hinges E E′, and brace G. Brace G is fixed fast to the frame. Brace B, with its strengthening-branch C, can be moved up and down by means of the hinges E E′. Braces B and C are cast of one solid piece, but in such a shape that the connecting-rod N, which works the knives, can move between braces B and C. This jointed brace B is connected with the cutter-bar A by means of hinges F F′, which will permit the cutter-bar to be raised on the outer end, while the hinges E E′ will permit the other end also to rise and the whole cutter-bar to slide over the slightest unevenness of ground.

When the work on the field is finished, or at any other time, the cutter-bar can be raised up and fastened to the machine by means of a projecting pin, P, which will fit in a corresponding hole, R. By this arrangement the machine will occupy less room, and can be easily moved over roads and fields without being exposed to the danger of breaking the cutter-bar.

It will be seen that this mode of connecting the cutter-bar to the machine by the two joints F F′ E E′, which I call the "double-rule joints," allows the cutter-bar to rise and lower at both or either of its ends, and, having motion only in one vertical plane, it can be raised up and thrown over the machine, as shown in Fig. 2, without requiring a universal joint for the connecting-rod which gives

motion to the cutters, as is the case where one of the joints is on the front beam of the machine.

We do not claim connecting the cutter-bar to the machine by a hinge-joint; nor do we claim the joint at or near the extremity of the cutter-bar; but

We claim—

Connecting the cutter-bar to the machine by the double-rule joint or the double-jointed coupling-piece B C, in the manner and for the purposes hereinabove set forth.

CORNELIUS AULTMAN.
L. MILLER.

Witnesses:
I. H. SMITH.
JAS. S. TONNER.

(Here follow diagrams marked pp. 649 & 650.)

651 UNITED STATES PATENT OFFICE.

JONATHAN HAINES, of Pekin, Illinois.

Improvement in Grass-Harvesters.

Specification forming part of Letters Patent No. 13523, dated September 4, 1855.

To all whom it may concern:

Be it known that I, Jonathan Haines, of Pekin, in the county of Tazewell and State of Illinois, have invented certain new and useful improvements in mowing-machines; and I do hereby declare the following to be a full, clear, and exact description of the same, reference being had to the accompanying drawings, making a part thereof, in which—

Figure 1 represents a perspective view of the machine. Fig. 2 represents a top plan or "bird's-eye" view.

Similar letters in both the figures refer to like parts.

The nature of my invention relates, first, to the mode of hanging the cutter-bar to the main frame, so as to allow it (the cutter-bar) to follow all the undulations of the ground regardless of the rising or falling of the frame, but so as always to preserve its parallelism with regard to the frame; also, in the combination, with a harvesting-machine, of an instantaneous and constantly-adjustable driver's seat, which can be moved forward or back at pleasure and at all times, for the purpose of placing the weight of the driver on any part of the machine, forward or back, to cause his weight to aid in holding the cutters to their work or to relieve them at any time.

To enable others skilled in the art to make and use my invention, I will proceed to describe the same with reference to the drawings.

A rectangular frame is first made of three longitudinal pieces, A A A, and two cross-pieces, B B, which is supported on the journals of an axle, C, provided with two driving-wheels, D E. One of these

649

2 Sheets—Sheet 1.

J. HAINES.

Mower.

No. 13,523. Patented Sept. 4, 1855.

No. 044.
Plano Mfg Co.
v.
Graham et al
h. 649

Fig. 1.

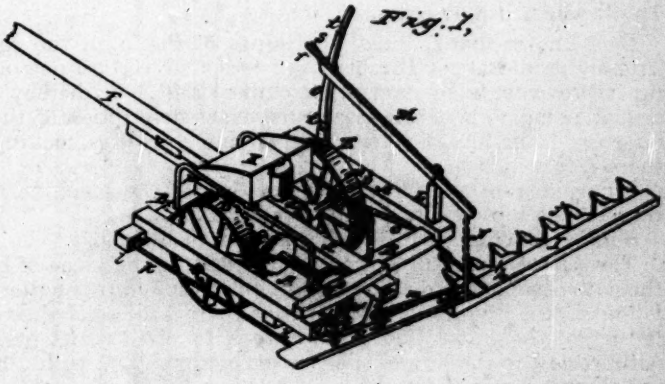

650

J. HAINES.

2 Sheets—Sheet 2.

Mower.

No. 13,523.

Patented Sept. 4, 1855.

No. 1044.
Ram Mfg Co.
v.
Grahamville.
A. 650

Fig. 2.

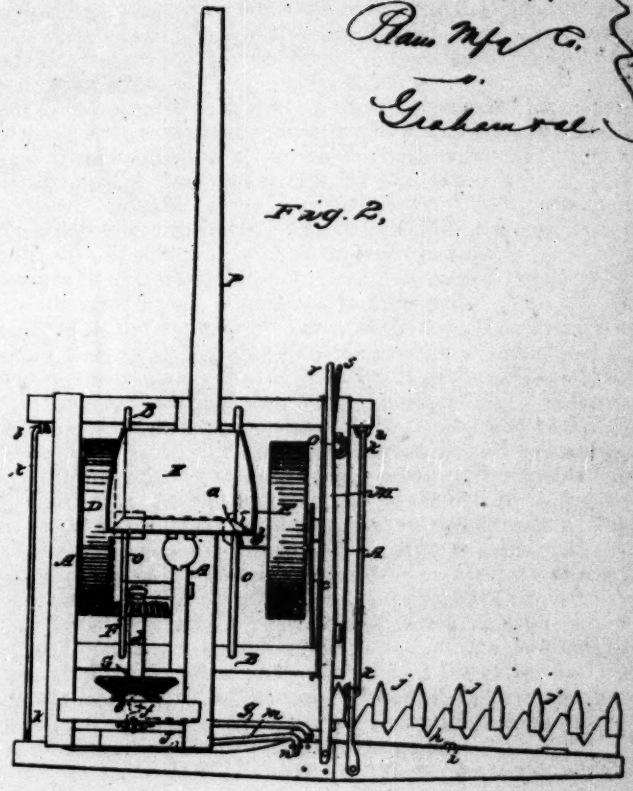

wheels, D, is fast on said axle, and the other, E, is fast and loose as circumstances may require, as follows:

a is one part of a clutch, fast on the axle, the other part of said clutch, *b*, being formed on the inner part of the hub of the wheel E.

c is a spring bearing against the outer side of the hub on which one-half of the clutch is formed, and holds into gear with the fixed half *a*, the projections or teeth of the clutch being so formed that when the machine is drawn forward both wheels revolve with the axle; but when the machine is turned round, the turning being almost invariably toward the cutters, said wheel E becomes loose from the clutch and turns on the axle, and thus facilitates the turning. Both wheels are therefore driving-wheels when the machine is cutting grain or grass, and besides the weight of the machine the weight of the driver is divided on the two wheels, and I thus avail myself of all the weight to throw friction on the driving-wheels to prevent them from slipping.

The wheel D is provided with cogs on the inner edge of its perimeter, which mesh with a pinion, F, on one end of the shaft *d*, and on the other end of said shaft *d* is a cog bevel-wheel, G, working into a pinion, *e*, on the shaft *f*, and to a crank on the lower end of this shaft *f* is fastened one end of the rod *g*, the other end being attached to the cutter-blade *h* to vibrate it. The cutter-blade *h* works under guides *i* at its rear, and is protected by fingers *j* in front.

The cutter-bar is composed of two pieces, H I, united together by bolts passing through a lap of their adjoining ends. The half H sustains the draft of the cutters and bar, and the half I, carrying the cutter-blade, fingers, &c., drags along on the ground. The object in making them of two pieces is that if one should get broken or wear out it could be replaced without removing the other half. The cutter-bar H I, thus made, is hung to the main frame by two rods, *k k*, hooked into dead-eyes *l* in the front cross-piece B, and extending back to the rear of the frame, where they are similarly hooked to the cutter-bar. By this manner of hanging the cutter-bar it is free to rise and fall to every projection or depression on the surface of the ground, and that, too, without regard to the rising or falling of the frame of the machine as the wheels mount over or run into uneven places. These two rods *k* would not, however, prevent the cutter-bar from moving laterally, and to prevent any lateral motion I use another bar, *m*, hooked into a suspended piece, J, at one end, and to the cutter-bar at *n* by its other end. This keeps the cutter-bar always right in its lateral position without preventing said cutter-bar from rising and falling as it conforms to the undulations of the ground or in passing over a stone or other impediment.

K is the driver's seat. It is connected to the supports *o o*, which run from front to near the rear of the frame, by loops *p p*, so that the driver may, without rising from his seat and by simply using his feet, move it forward or back, so that his weight may be
652 used to balance the machine and throw the cutters into or out of the grass.

To a standard, L, on the right-hand longitudinal piece A, is hung

a lever, M, to the rear end of which is hung by a chain, N, the cutter-bar H I, at about its center.

Near the front end of the lever M, which is provided with a handle, *r*, and a spring-catch, *s*, is an upright piece, O, supported in the frame and provided with any suitable number of notches, *t*, into which the spring-catch *s* will drop when it is released from the hand of the driver. By means of this lever M the driver can raise or hold up the cutter bar and cutters when it is desirable to raise them for any purpose.

P is the tongue, centrally placed on the frame or between the wheels, so as to put the horses near the center of the line of draft.

A seat for the driver, which was susceptible of adjustment, has been used; but this seat, when adjusted, was permanent, and consequently the driver could not move himself forward and back as the exigencies of the case might require—as, for instance, when working on ascending or descending ground, or in light or heavy grass, all of which may occur within a few rods—and if the machine must be stopped to make separate adjustments for these contingencies, he would be doing little else. By my mode of arranging the seat the driver may aid the machine by shifting his weight at any time as occasion may require.

Having thus fully described the nature of my invention, I would state that adjustable seats, or seats which can be adjusted, have been used; but to do this the machine must be stopped, and the adjustment, when made, is permanent. This I do not claim; but

What I do claim as of my invention, and desire to secure by letters patent, is—

1. The hanging of the cutter-bar to the main frame by means of the longitudinal rods *k* and transverse rod *m*, so that said cutter-bar may be free to rise and fall to the undulations of the ground, while it is prevented from all lateral motion, substantially as described.

2. The use of a driver's seat when mounted on ways or rails so that the driver can at pleasure throw his weight forward or backward to aid in balancing the machine or in holding or relieving the cutters as the variable character of the ground or condition of the grass may require, as described.

JONATHAN HAINES.

Witnesses:
THOMAS H. UPPERMAN.
EMIL COHEN.

(Here follows diagram marked p. 653.)

C. Wheeler Jr. 653

Mower.

No. 12367

Patented Feb. 6, 1855.

No. 1044.
Plano Mfg Co
—o
Graham & al.
} p. 653

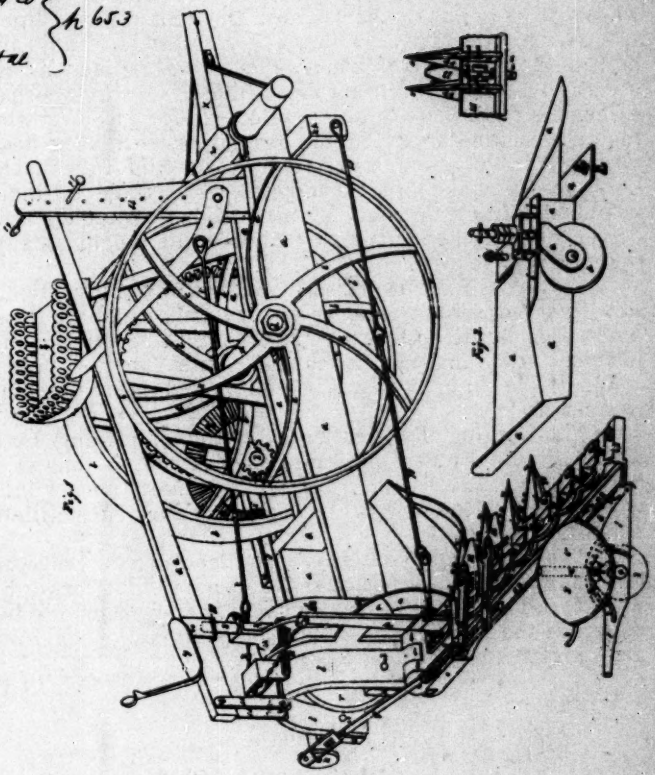

Witnesses
S. J. Bowen
Amerzich Underhill

Inventor
Cyrene Wheeler Jr.

654 UNITED STATES PATENT OFFICE.

CYRENUS WHEELER, Jr., of Poplar Ridge, New York.

Improvement in Grain and Grass Harvesters.

Specification forming part of Letters Patent No. 12367, dated February 6, 1855.

To all whom it may concern:

Be it known that I, Cyrenus Wheeler, Jr., of Poplar Ridge, in the town of Venice, county of Cayuga, State of New York, have invented and made certain new and useful improvements in a machine for harvesting grain and grass; and I do hereby declare that the following is a full and accurate description of the construction and operation of the same, reference being had to the accompanying drawings, making part of this specification, in which—

Figure 1 is a perspective view of the machine; Fig. 2, a perspective view of the table for receiving the grain when cut, and Fig. 3 a view of the under side of a section of the cutter-bar with cutters and spring attached.

a, Fig. 1, is the frame-work of the machine; *b*, the driving-wheel; *c*, the rim attached to the driving-wheel *b*, having internal gear or cogs.

d is a shaft to which the driving-wheel *b* is attached; *e*, a wheel of same size as said driving-wheel and attached to shaft *d* on the outside of the frame *a*, turning freely on the shaft as its axle and serving to support the frame in an upright position; *f*, pinion; *g*, face-wheel; *h*, shaft to which they are attached; *i*, pinion gearing into face-wheel *g*; *j*, shaft, to which pinion *i* is attached; *k*, crank-wheel attached to shaft *j*; *l*, arched bar of iron or other substance attached to the hinder part of the frame-work of the machine by bolts *a b*, on which it turns as a pivot. *m* is a rule-joint admitting of the rising and falling of the outer end of the cutter-bar *x x*; *n*, segments of circles, one of which is firmly attached to the arch *l*, the other to the socket *o*, and serve to strengthen and support the joint *m*.

o is a socket, to which the cutter-bar *x x* is fastened by bolts *a c*.

p is a standard firmly attached to the socket *o* by the same bolts; *q*, the connecting-rod connecting the crank-wheel *k* with the slide *a d*.

a e is a short connecting-rod, uniting the slide *a d* with the driving-rod *w w*, by which motion is imparted to the cutters *m m* and *l l*.

r is a caster-wheel; *s*, a spindle to the same, which spindle passes through the bail *h h* and its lip *a f*; *t*, a rod and chain connecting the standard *p* to the lever *v*.

u is a pulley, fastened to the arch *l*, around which the chain *t* passes.

v is a lever, which serves through its connections to raise the outer end of the cutter-bar *x x* when desired by the operator; *w*, a roller, to which the tongue *x* is attached; *y*, a seat for the person who rakes off the grain; *z*, a seat for the operator.

a a is a lever passing over the top of the spindle *s* of the caster-wheel *r*, to which it is attached by a stirrup, *c c*, the spindle *s* passing through said stirrup and being kept in place by the pin *g g*. The lever *a a* is connected at its back end to the arch *l* by straps *d d* and bolts *e e*. The lever *a a* extends forward of the operator's seat, and is secured at any required height by pins *f f* passing through the standard *b b*.

b b is a standard attached to the frame-work *a*, and rising sufficiently to fasten the levers *a a* and *v* at any required height by the pins *f f*. The lever *a a* is used by the operator for pressing down on the spindle *s* of the caster-wheel *r*, thereby raising the hinder part of the machine from the ground, and with it the heel or inner end of the cutter-bar *x x*, for the purpose of passing obstructions when cutting, or of cutting grain higher from the ground when used as a harvester, or for the purpose of passing from one field to another. The lever *v* serves by its connections *t u* and *p* to raise the outer end of the cutter-bar *x x* either for passing obstructions or moving from one field to another.

h h is a strong iron bail, with a lip, *a f*, attached to its upper part, it being of sufficient height to admit the caster-wheel *r* to play freely under it. The space between the lower ends of the bail *h h* should be equal to the width of the frame *a*, to which it is bolted a few inches forward of the arched bar *l* by bolts *a g*. This bail serves for a stand to keep the caster-wheel *r* in proper position, and as an attachment for securing the graduating-screw *i i*, which passes through a part of the arch *l*, which arch is fixed and kept in any required position by the nuts *o o*, thereby raising or depressing the points of the cutters *r r* and *l l*, as desired, for operation.

j j is a rod attached to the standard *p*, near its base, by a screw and nut, *a h*, and at the other end it is attached to a strong knee, *k k*, which is fastened to the under side of the frame-work *a*, and projects outward beyond the wheel *e*, to prevent the rod *j j* from interfering with the motion of said wheel, and downward a few inches below the frame *a*. This rod serves to strengthen the joint *m*.

x x is the cutter-bar of the machine, composed of iron or other hard substance, in width from five to six inches, and in its thickest part from one and a half to two inches, and in length corresponding to the width of the swath desired to be cut.

g g are holes through the cutter-bar, back of the bolt-holes *s s* and in front of the ribs *t t*, and serve for the passage through the cutter-bar *x x* of the dirt and grit that would otherwise collect on the stationary cutters *r r*.

t t are circular ribs raised on the cutter-bar *x x* from one-eighth to one-fourth inch higher than the bar itself in front of them, and serve as a bearing for the projection *u u* on the under side of the shanks *m m*.

y y are cavities for inserting the stationary cutters *r r*.

s s are holes for inserting bolts *p p* for attaching the movable cutters *m m* and *l l*.

r r are the stationary cutters, composed of steel or other metallic substance from one-eighth to one-fourth inch thick, from eight to

ten inches in extreme length, and from two to three inches wide in the widest part. The cutters *r r* are made narrower at the back end, forming a shank corresponding in width with the cavities *y y*, in which they are secured by rivets *c s*. The cutters *r r* should be tapered from their widest part to a point at their forward end to allow them to enter the standing grass or grain freely, and should be made sufficiently concave on their upper surface from their shank forward, so that when ground straight on their upper edges they will present narrow ribs or cutting-edges *a i* for the movable cutters *l l* to operate against.

l l are the upper or movable cutters. *m m* are shanks to the same. The cutters *l l* should be composed of steel from one-eighth to one-fourth inch thick, from three to five inches long, and from two to three inches wide at their widest point, tapering toward the forward end, which may be from one-half to one inch wide and made concave on the under side, *l l*, Fig. 3, and when ground should present a narrow rib or cutting-edge, *a i*, Fig. 3, on each side. *m m* are the shanks of the movable cutters *l l*, being in extreme length from six to eight inches, composed of iron or other metallic substance, being from three-fourths to one inch wide at the back part, and from one inch to one and a half inch wide where the bolts *p p* pass through them. These shanks *m m* extend forward of the bolts *p p* far enough to fasten them on the top and back part of the cutters *l l* by rivets *n n*. On the under side of the shanks *m m* are projections *u u*, which extend from one-fourth to three-fourths inch below their under side and rest on the curved rib *t t*, and serving to keep the shanks *m m* free from the cutter-bar *x x*, and leaving an open space between the shanks *m m* and the cutter-bar *x x* of from one-fourth to three-fourths inch. The back end of the shanks *m m* has a hole through it, *v v*, for attaching them by pins to the driving-rod *w w*.

p p are bolts passing through the shanks *m m* of the cutters *l l*, and through the cutter-bar *x x* and a spring, *a*, Fig. 3, and is kept down by a pin, *b*, Fig. 3, which pin passes through the bolt *p p*, Figs. 1 and 3, at its lower end and across the spring *a*, Fig. 3. The bolt *p p* may be made of metal from one-half to three-fourths inch in diameter, and so fitted that it will slide freely through the cutter-bar *x x*, Fig. 1.

a, Fig. 3, is a flat spring about one inch wide, and from one-sixteenth to three-sixteenths inch thick, and from three to five inches long. The back end is fastened to the cutter-bar *x x* on the under side, back of the bolt *p p* about three inches, its forward end reaching beyond the bolt *p p*, which passes through it and is turned up in front of the cutter-bar *x x* sufficiently to prevent it (the spring *a*, Fig. 3) from catching the stubble. The spring *a*, Fig. 3, being of well-tempered steel, and being attached to the bolts *p p* by the pin *b* passing over it, serves to draw down the bolt through the cutter-bar *x x*, and through the shanks *m m* of the movable cutters *l l*. The head of the bolts *p p*, Fig. 1, resting on the shanks *m m*, serves to press the edges of the cutters *l l* firmly against the edges of the cutters *r r* with a uniform elastic pressure, the cutter-edges adjusting themselves in their movement by means of the bolt *p p* and spring *a*, Fig. 3, with a uniform pressure at all points of contact, the cutters

severing all kinds of grass and herbage in the most perfect manner without clogging or buffing, and with much less friction, and consequently requiring much less power for effective operation than in machines heretofore in use. The shanks *m m* of the movable cutters *l l*, by having a free open space under them, and having only a bearing at *u u* and at the point where the bolts *p p* pass through them, move freely on such bolts as their pivots, the open space under the shanks *m m* preventing effectually all accumulation of gum and grit under the shanks *m m* of the cutters *l l* and around the bolts *p p*, and thus avoiding the difficulty experienced in other machines from "gumming."

d, Fig. 3, are ribs on the under side of the cutter-bar *x x*, corresponding in length to the width of the cutter-bar *x x*, from one to one and a half inch deep and from one-half to three-fourths inch thick. They serve to protect the spring *a*, Fig. 3, and lower end of the bolt *p p*, Fig. 3, from stones and other obstructions, and to lessen the friction of the cutter-bar *x x* on the ground when in use.

z z are braces or guards from one-half to three-fourths inch in breadth and thickness, united to the rib *d*, Fig. 3, on its under side by rivets *c s*, which rivets serve to connect it and the stationary cutters *r r* to the cutting-bar *x x*. They are curved upward, and
656 are united at their points to the points of the stationary cutters *r r* by rivets &, and serve to protect the cutters from injury when the machine is in operation.

w w, Fig. 1, is the driving-rod of the cutters *l l*, and by its connection with the crank-wheel *k* and cutter-shanks *m m* imparts motion to the said cutters *l l*.

1 2 3 4 5 6 7 8 9 10 11, Fig. 1, when combined, form a revolving rake, of which 1 represents a light frame, from two and a half to three feet long, of sufficient width and height to hang a wheel, 3, from seven to ten inches in diameter, on a shaft, 4, which passes through it and on each side through the frame 1, the wheel 3 revolving with its shaft. The shaft 4 extends through the frame 1, and on its inner or left-hand end has a bevel or miter wheel, 7, attached, which wheel may be from three to four inches diameter, having cogs or teeth. 5 is a wheel from ten to twelve inches in diameter, having its upper surface oval or convex and its under surface concave. It is firmly attached to a shaft, 6, which passes through a cap, 11, in which the shaft 6 revolves. At the lower end of the shaft 6 is attached a bevel or miter wheel, 10, which gears into wheel 7. In the outer edge of wheel 5 I insert from four to ten teeth, 8, from four to six inches long, and curved backward and downward sufficiently to shed the grass freely when in motion. 2 is an apron from ten to fourteen inches long and from six to eight inches wide, fastened to the frame-work 1 on the top and in front of the wheel 3, with its forward edge nearly touching the cutter-bar *x x* and its back edge reaching under the front edge of wheel 5, the teeth 8 in the revolution of the wheel 5 passing over the apron 2. The frame 1 is attached to the outer end of the cutter-bar *x x* on its on its back edge by a hinge, 9. In the movement of the cutter-bar *x x* forward the frame 1 follows, the under part of the wheel 3 rest-

ing on the ground and revolving with its axle 4 and cog-wheel 7, which wheel imparts motion to the cog-wheel 10 and its shaft 6, carrying round the convex wheel 5 in a horizontal manner, the teeth 8 passing from right to left along the apron 2, and effectually removing the cut from the standing grass, and leaving a clear and uniform track adjoining the standing grass from ten to twelve inches wide, and depositing the grass cut and removed free from bunches.

Fig. 2 is a detached view of the table for receiving the grain cut by the machine when used as a harvester. It is attached to the cutter-bar *x x*, Fig. 1, by bolts *f*, Fig. 2, passing through the holes *a j*, Fig. 1. *a*, Fig. 2, is the frame-work and platform of the table, which may be of any light material possessing sufficient strength, and should correspond in length to the length of the cutter-bar *x x*, to which it is bolted, and be of sufficient width to hold the tallest grain. *b*, Fig. 2, is a wheel from eight to twelve inches in diameter and from two to three inches thick; *g*, a shaft, to which the wheel *b* is attached; *c*, a strap or leg of spindle *d*, the whole combined making a caster-wheel, which is attached to the outer end of the table *a*, Fig. 2, a few inches back of the place where the table *a*, Fig. 2, attaches to the cutter-bar *x x*, Fig. 1, and is kept in position by the spindle *d* passing through a projection, *i*, of the table *a* and a cap, *h*, and which is fastened on top of such projection, admitting of its turning freely in such projection *i* and cap *h*. *e* are washers on the spindle *d*, and serve, when placed on such spindle below the projection *i*, to raise the table *a* to any required height and keep it and the cutter-bar *x x* at such height when used as a harvester of grain.

Having thus fully set forth my improvements in the foregoing description, I will proceed to state my claims.

In the first place, I do not claim the frame-work *a*, Fig. 1, the driving-wheel *b*, its cogged rim *c*, shaft *d*, pinion *f*, face-wheel *g*, shaft *h*, pinion *i*, shaft *j*, crank-wheel *k*, driver's seat *z*, raker's seat *y*, connecting-rod *q*. Neither do I in this intend to disclaim the screw *i i*, nuts *o o*, arched bar *l* and its pivotal attachment *a b*, the joint *m*, quadrants *n*, socket *o*, standard *p*, caster-wheel *r*, spindle *s*, rod and chain *t*, pulley *u*, lever *v*, bail *h h*, having previously invented them or their equivalents, which are fully set forth and described in a caveat and drawings filed by me in the Patent Office on or about the 28th of November, 1853, and still further described in a specification, model, and drawings filed in the same office on or about the 16th of March, 1854; but

What I do claim, and desire to secure by letters patent, is—

1. The combination of the double-edged cutters *r r*, Fig. 1, with the cutter-bar *x x*, the braces *z z*, the vibrating cutters *l l*, their shanks *m m*, projections *u u*, the circular ribs *t t*, the bolts *p p*, the spring *a*, Fig. 3, the holes *g g*, Fig. 1, the ribs *d*, Fig. 3, and the cavities *y y*, Fig. 1, or their equivalents, substantially as set forth, the whole forming the cutting apparatus of the machine.

2. The revolving or track rake consisting of its frame 1, Fig. 1, its wheel 3, shaft 4, pinions 7 and 10, shaft 6, wheel 5, teeth 8, apron

2, joint 9, and cap 11, or their equivalents, arranged and combined substantially as set forth.

CYRENUS WHEELER, JR.

Witnesses:
S. J. BOWEN.
AMAZIAH UNDERHILL.

(Here follow diagrams marked pp. 657 & 658.)

659 UNITED STATES PATENT OFFICE.

CYRENUS WHEELER, JR., of Poplar Ridge, New York.

Improvement in Grain and Grass Harvesters.

Specification forming part of Letters Patent No. 12044, dated December 5, 1854.

To all whom it may concern:

Be it known that I, Cyrenus Wheeler, Jr., of Poplar Ridge, in the town of Venice, county of Cayuga, and State of New York, have invented and made certain new and useful improvements on a machine for harvesting grain and grass; and I do hereby declare that the following is a full and exact description of the construction and operation of the same, reference being had to the accompanying drawings, making part of this specification, in which—

Figure 1 is a perspective view of the machine; Fig. 2, of the arched bar and half of joint; Fig. 3, of socket, standard, quadrant, and corresponding half of joint; Figs. 4 and 5, longitudinal sections of cutter bar or arm with knife or cutter and spring; Fig. 6, cutter-spring; Fig. 7, perspective view of table or apron for holding the grain.

a, Fig. 1, are the side pieces of the frame, attached to the shaft *b*, Fig. 1, of the driving-wheel by boxes *c*, Fig. 1, in which the shaft revolves. The side pieces, *a*, Fig. 1, extend forward of the driving-wheel *d*, Fig. 1, sufficient distance to attach a tongue by a roller, *e*, Fig. 1, which admits of the tongue moving freely up or down, thereby enabling the machine to adjust itself freely to inequalities of the ground. The side pieces, *a*, Fig. 1, extend back from the driving-wheel sufficient distance to admit of a cross-piece, *f*, Fig. 1, and to give sufficient space for the caster-wheel *g*, Fig. 1, to move freely on its spindle *h*, Fig. 1, between the cross-piece and the connecting-rod *i*, Fig. 1.

d, Fig. 1, is the driving-wheel of the machine, which is firmly attached to the shaft *b*, Fig. 1.

J, Fig. 1, is a rim attached to the inside of the arms *k*, Fig. 1, of the driving-wheel *d*, Fig. 1, and having cogs *l*, Fig. 1, on its internal surface, which gear into a pinion, *m*, Fig. 1, which pinion is attached to a shaft, *n*, Fig. 1, on which is also fastened a face-wheel, *o*, Fig. 1, which face-wheel gears into the pinion *p*, Fig. 1, which pinion is firmly attached to the shaft *q*, Fig. 1, at one end, and at the other is attached a wheel, *r*, Fig. 1, in which is inserted a wrist, which

Cyrenus Wheeler Jr. 657

Improvement in grain & grass Harvesters.

No. 12.044. Patented Dec 5. 1854.

Fig: 2

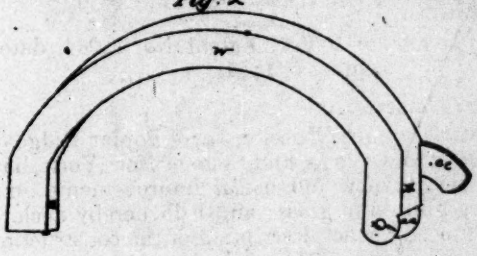

Fig: 3

Fig: 4

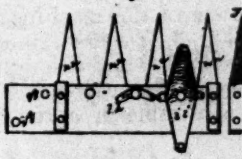

Fig: 5

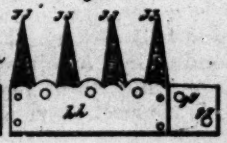

Fig: 6.

Fig: 7.

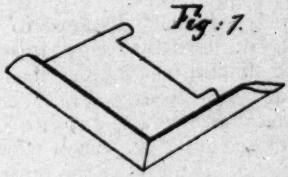

No. 10444.
Plano Mfg Co.
v.
Graham et al
} p. 657

Cyrenus Wheeler Jr.

Cyrenus Wheeler Jr. 658

Improvement in grain & grass Harvesters.

Patented Dec 5. 1854.

No 12.044.

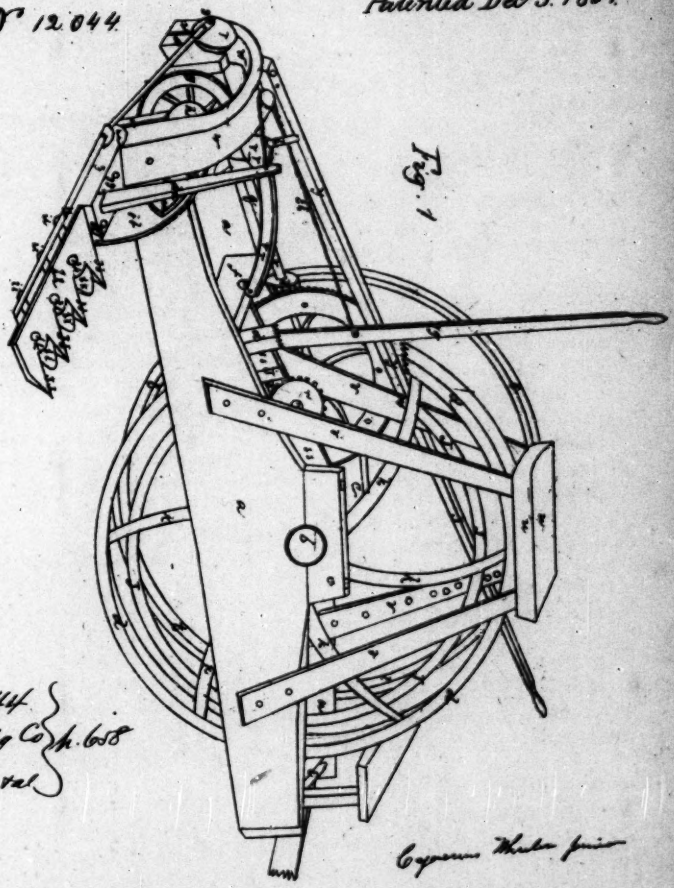

Fig. 1

No 1044
Plano Mfg Co
v
Graham et al
p. 658

Cyrenus Wheeler Jr

serves as a crank. The shafts *n* and *q*, Fig. 1, are supported by boxes attached to the frame-work in which they freely revolve.

t, Fig. 1, is a wheel of the same size as the driving-wheel, and is attached to the shaft *b*, Fig. 1, which projects sufficiently far through the side piece, *a*, Fig. 1, to admit of the wheels revolving freely outside of the frame-work, the wheel revolving freely on the shaft or its axle without interfering with the motion of the driving-wheel, while it serves to keep the machine in an upright position.

u, Fig. 1, is the driver's seat, elevated above the driving-wheel, and supported by its legs *v*, Fig. 1.

w, Fig. 1, is an arched bar passing over and on the outside of the hinder part of the side pieces of the frame *a*, Fig. 1, to which it is attached by bolts *x*, Fig. 1, passing through both and admitting of the top of the arch *w*, Fig. 1, being turned backward or forward, as on hinges or pivots, by the lever *y*, Fig. 1, which is firmly bolted to the top of the arch *w*, Fig. 1, and extends forward on the inside of the driving-wheel to the inside forward leg *v*, Fig. 1, to which it is secured by a guide and pins.

z, Fig. 1, is a socket, with the half of a rule-joint, *a a*, Fig. 1, attached to its corresponding half at the end of the arched bar, *w*, Fig. 1, by a bolt passing through both.

b b, Fig. 1, is a quadrant attached firmly to the inner side of the socket *z*, Fig. 1, and passes by and close to a similar one, *c c*, Fig. 1, attached to the end side of the arched bar *w*, Fig. 1, thereby strengthening and supporting the joint *a a*, Fig. 1.

d d, Fig. 1, is a standard, firmly attached at its base or lower end to the socket *z*, Fig. 1, and at its upper end is perforated with a hole, to which is attached a chain or rope, *e e*, Fig. 1, which passes round the pulley *f f*, Fig. 1, on the top of the arched bar *w*, Fig. 1, and is carried forward to the lever *g g*, Fig. 1, which lever is attached at its lower end by a bolt to the middle piece, *s s*, Fig. 1, of the frame, admitting of the upper end of the lever being moved backward or forward.

h h, Fig. 1, is a cutter-bar, composed of an upper and lower portion, with sufficient space left between for the admission of the knives or cutters *i i*, Fig. 1, and a spring, *o o*, Fig. 4, between the knife or cutter and the bed-piece or lower half of the cutter-bar. (See *h h*, Fig. 4.)

J J, Fig. 1, are points of the stationary or upper portion of the cutter; *k k*, Fig. 1, bolts passing through both parts of the cutter-bar *h h*, Fig. 1, and through the knives or cutters *i i*, Fig. 1, and through the spring *o o*, Fig. 6, the knives or cutters *i i*, Fig. 1, moving on the bolts *k k*, Fig. 1, as on a pivot. The shanks of the cutters *i i*, Fig. 1, extend back of the bar *h h*, Fig. 1, far enough to admit of attaching the driving-rod *l l*, Fig. 1, to them by bolts or pins.

i, Fig. 1, is a connecting-rod, composed of two parts, with a screw admitting of its being lengthened or shortened at pleasure. One end of the rod is attached to the driving-rod *l l*, Fig. 1, by a joint, and the other to the crank or wrist *s*, Fig. 1.

g, Fig. 1, is a caster-wheel. *h*, Fig. 1, is a spindle and straps or legs which support the wheel, the spindle passing through the arm

r r, Fig. 1, which arm is bolted at the other end firmly to the cross-piece *f*, Fig. 1.

Figs. 2 and 3 are detached views of the arm and socket. When united at *m m*, Figs. 2 and 3, by a bolt, a strong joint is made similar to a rule-joint, which admits of the outer end of the cutter-bar *h h*, Fig. 1, rising or falling with the inequalities of the ground when in use. The arch *w*, Fig. 2, is united to the hind part of the side pieces, *a*, Fig. 1, by bolts at *x*, Fig. 1, which admits of the top of the arch being rolled on the bolts backward or forward.

Figs. 4 and 5 are longitudinal sections of the cutter-bar, Fig. 4 being a representation of the upper surface of the under half or portion of the bar, and Fig. 5 the under part of the upper portion or half of the bar.

The points or stationary cutters J J, Fig. 5, are made concave on their under side for the purpose of giving a better fit to the cutting-edges of the movable cutters or knives *i i*, Fig. 4, which knives have a concave surface on their upper part from their point to a short distance back of the bolts on which they turn.

n n, Fig. 4, shows the upper portion on surface of the guards or braces, which guards are fastened to the under side of the under portion or half of the cutter-bar, and are curved upward and meet the points of the upper or stationary cutters, to which they are united by rivets or screws, sufficient space being left between the two for the free play of the movable cutters.

o o, Fig. 6, represents a curved spring of steel with a hole through the middle for the admission of the bolt on which the movable cutter turns. At one end of the spring *o o*, Fig. 6, is a slot, *p p*, Fig. 6, which serves, by means of a pin in the lower part of the cutter-bar, to keep the spring *o o*, Fig. 4, in position. The spring *o o*, Fig. 4, by its form and position under the movable cutter *i i*, Fig. 4, serves to press the upper or cutting edge firmly against the under surface of the upper portion of the cutter-bar *h h*, Fig. 5, and its stationary points or cutters J J, Fig. 5. The Figs. 4 and 5, when united at each end by bolts or rivets, sufficient space being left between the two for inserting the knives or cutter and spring, form the cutter-bar, which is firmly bolted to the socket *z*, Fig. 3, by bolts passing through the holes *q q*, Figs. 4 and 5, and corresponding holes *q q* in the socket *z*, Fig. 3. The cutters *i i*, Fig. 4, are beveled from the upper edges downward and inward, making a sharp shear-edge on both sides. The upper or stationary cutters or points, J J, Figs. 1 and 5, are beveled upward and inward, so as to present a sharp corner for the movable cutter to operate against.

Fig. 7 is a representation of the table or apron for receiving the grain when cut, and bolts or fastens to the under side of the cutter-bar *h h*, Fig. 1. The cutter-bar *h h*, Fig. 1, is composed of two bars of iron of similar width and thickness, bolted or riveted together with their flat surfaces parallel to each other, a space being left between them by inserting blocks or pieces of metal, and the stationary cutters may be welded to the upper bar or fastened to it by rivets or bolts.

The wheel *t*, Fig. 1, being constructed partly of wood and partly

of iron or wholly of iron, and so fitted to the shaft as to play freely on it as its axle without interfering with the motions of the driving-wheel, the face-wheel *o*, pinions *m* and *p*, Fig. 1, should be of such size as, combined with the driving-wheel *d*, Fig. 1, will give from twenty-five to thirty revolutions of the crank or wrist *s*, Fig. 1, to one of the driving-wheels. The crank-shaft *g*, Fig. 1, should be of sufficient length to bring the crank or wrist *s*, Fig. 1, in direct line with the driving-rod *l l*, Fig. 1.

The arched bar *w*, Figs. 1 and 2, should be composed of iron. The ends of the arched bar *w*, Fig. 1, on its inside should be made straight and parallel to each other.

The spring is bent in a curved or arched form, *o o*, Fig. 6, so that the ends of the spring may rest on the lower part of the cutter-bar *h h*, Fig. 4, and the center of the spring press against the under portion of the knife or cutter *i i*, Fig. 4.

I also fasten to the top of the arch *w*, Fig. 1, a lever, *y*, Fig. 1, of iron or wood, which extends forward and passes through a guide attached to the inside forward leg, *v*, Fig. 1, and is confined at any required height by pins passing through the guide and leg.

The caster-wheel *g*, Fig. 1, is composed of iron from ten to sixteen inches in diameter, with a rim from two to three inches wide, which is placed in a strong stand or legs, *f*, with a spindle, *h*, Fig. 1, attached, which spindle passes through an arm or socket, *r r*, Fig. 1.

The arm or socket *r r*, Fig. 1, is composed of iron of a curved form and of sufficient length to admit the caster-wheel *g*, Fig. 1, playing freely on its spindle under it without interfering with the cross-piece *f*, Fig. 1, to which the arm is firmly bolted.

The apron or grain-table, Fig. 7, is composed of a light frame-work covered with boards, which may be made to correspond in length to the cutting portion of the cutter-bar *h h*, Fig. 1, and may be fastened to the cutter-bar, when desired, by bolts, the width of the table being made sufficient to catch the falling grain, which may be raked from it by a man riding on the machine.

661 The movable cutters *i i*, Fig. 1, by their position under the stationary points or cutters *j j*, Fig. 1, and by being firmly pressed against the corners or edges of them by the springs *o o*, Fig. 6, as they move to and fro on their bolts in the arc of a circle, cut freely and easily all grass or herbage coming between the points and cutters, the machine cutting equally well the coarsest or finest and softest grass, not being liable to clog or buff in thick, fine, herbage, and cutting equally well at the fastest or slowest walk of the team, the arched bar and socket being supported and kept from pressing too hard upon the ground by the caster-wheel *g*, Fig. 1. The caster-wheel also, by its support, admits of the machine being turned short round, avoiding the necessity of backing the team in coming out and setting in at the corners of the standing grass. The cutter-bar *h h*, Fig. 1, in the movement of the machine forward, rises and falls freely on the joint *a a*, Fig. 1, adjusting itself to the inequalities of the ground. By the lever *y*, Fig. 1, attached to the arch *w*, Fig. 1, the driver can raise or depress the points of the cutters *i i* and *j j*, Fig. 1 (the arch *w*, Fig. 1, turning on its bolts *x*, Fig. 1, as on a

hinge), for the purpose of cutting higher or lower or for the purpose of passing any obstructions met with without leaving his seat, and in like manner can by the aid of the perpendicular lever *g g*, Fig. 1, and its connections—the chain *e e*, Fig. 1, the pulley *f f*, Fig. 1, and the standard *d d*, Fig. 1—raise the outer end of the cutter-bar *h h*, Fig. 1, to any required height and sustain it there for the purpose of passing obstructions or for the convenience of moving from one field or place of operation to another.

Having thus fully described my improved machine, I would state that I do not claim the driving-wheel, face-wheel, or pinions, the boxes or shafts of the cam. Neither do I claim the connecting-rod of two parts, or the driving-bar, nor claim the double-edged movable pivoted cutters or shears as pivoted in the center and placed on the top of the stationary or fixed ones, or the cutter-bar as heretofore constructed by others. Neither do I claim the seat for the driver or the table for receiving the grain. I do not claim the caster-wheel as such alone; but

What I do claim as my invention, and desire to secure by letters patent, is—

The hanging the cutter-bar *h h*, provided for the purpose with a socket, *z*, to one extremity of the arched bar *w* by means of joints *a a* and segments *b b c c*, said arched bar being in its turn pivoted in *x* to the main frame *a a*, all for the purpose of giving the cutter-bar *h h*, by means of levers *y*, *d d*, and *g g*, a motion independent of the frame, and both rotating longitudinally parallel to the ground and oscillating radially from the joints *a a* in order to adapt the same to the inequalities of the ground, or to stop its action at pleasure, as described.

CYRENUS WHEELER, JR.

Witnesses:
ALLEN MOSHER.
GEORGE MOSHER.

662 Afterwards, to wit, on the fifth day of July, 1888, there was filed in said clerk's office an appeal bond in said entitled cause; which said appeal bond is in the words and figures following, to wit:

Appeal Bond.

United States Circuit Court, Northern District of Illinois. In Equity.

ALVARO B. GRAHAM and PETER WHITMER, Administrator of the Estate of Hugh Graham, Deceased,

vs.

THE PLANO MANUFACTURING COMPANY.

Know all men by these presents that we, The Plano Manufacturing Company, a corporation duly established by law and having its principal place of business in Chicago, Cook county, Illinois, principal, and William H. Jones and Elijah H. Gammon, both of Chicago, Cook county, Illinois, as surety, are held and firmly bound unto Alvaro B. Graham and Peter Whitmer, administrator of the estate

of Hugh Graham, deceased, in the penal sum of twenty-five thousand dollars ($25,000), lawful money of the United States; for the payment of which, well and truly to be made, we hereby bind
663 ourselves and each of ourselves, our successors and assigns, jointly and severally and firmly by these presents.

In witness whereof The Plano Manufacturing Company has hereunto set its signature and its corporate seal, by its president, and the said William H. Jones and Elijah H. Gammon have affixed their hands and seals this 5th day of July, 1888.

The condition of this obligation is such that whereas the above-bounden The Plano Manufacturing Company has been allowed an appeal to the Supreme Court of the United States from the decree of the circuit court of the United States for the northern district of Illinois, rendered by said court in the above-entitled cause in favor of the said Alvaro B. Graham and Peter Whitmer, administrator of the estate of Hugh Graham, deceased, and against The Plano Manufacturing Company, and entered of record therein July 3rd, 1888:

Now, therefore, if The Plano Manufacturing Company shall prosecute its said appeal to effect and shall pay and answer all damages and costs in case it shall fail to make good its plea, then this obligation shall be null and void; otherwise to be and remain in full force and effect.

THE PLANO M'F'G CO.,
[SEAL.] By WM. H. JONES, *President.*
664 E. H. GAMMON. [SEAL.]
WILLIAM H. JONES. [SEAL.]

Approved:
H. W. BLODGETT, *Judge.*

Endorsed: Filed July 5, 1888. Wm. H. Bradley, clerk.

665 NORTHERN DISTRICT OF ILLINOIS, *ss:*

I, William H. Bradley, clerk of the circuit court of the United States for said northern district of Illinois, do hereby certify the above and foregoing to be a true and correct transcript of the record of all the proceedings had in said court in the cause wherein Alvaro B. Graham and Peter Whitmer, administrator of the estate of Hugh Graham, deceased, are the complainants and The Plano Manufacturing Company, William H. Jones, Edgar L. Henning, George W. Chamberlain, Frederick J. Huse, and Elijah H. Gammon are the defendants, as the same appear from the records and files of said court now remaining in my custody and control.

In testimony whereof I have hereunto set my hand and affixed the seal of said court, at my office, in Chicago, in said district, this sixteenth day of July, 1888.

[Seal of Circuit Court U. S., Northern Dist. Illinois, 1855.]

WM. H. BRADLEY, *Clerk.*

Endorsed on cover: N. Illinois C. C. U. S. No. 1044. The Plano Manufacturing Company, appellant, *vs.* Alvaro B. Graham and Peter Whitmer, administrator of the estate of Hugh Graham, deceased. Filed July 30, 1888.